New Product

OMRON

Digital Temperature Controller
E5CD/E5ED

Next Generation Digital Temperature Controllers E5CD (48 × 48 mm) and E5ED (48 × 96 mm) Lineup of Push-In Plus technology that reduce wiring work. E5CD-B (48 × 48 mm) and E5ED-B (48 × 96 mm)

Optimize Control by Detecting Status Changes.
Easily Satisfy Both Productivity and Quality.

48 × 48 mm
E5CD/E5CD-B

48 × 96 mm
E5ED/E5ED-B

Accurately Measure Seal Temperatures
Temperature Sensors for Packaging Machines

Temperature Sensors
E52
Ferrule terminal type added

Digital Temperature Controller
E5CD/E5CD-B (48 × 48 mm)

Optimize Control by Detecting Status Changes.
Easily Satisfy Both Productivity and Quality.
Models with Push-In Plus technology Added to Lineup.

- Automatic optimization of control for changes in systems (Adaptive Control).
- Functions specialized for packaging machines (Temperature Sensors for Packaging Machines and Automatic Filter Adjustment).
- Function specialized for water-cooled extruders (Water-cooling Output Adjustment).
- Indication data (Power ON Time, Ambient Temperature, and Output ON/OFF Count).
- Basic performance is same as the E5□C standard models.
- Draw-out structure for easy maintenance. (Screw terminal blocks only)

48 × 48 mm
Screw Terminal Blocks
E5CD

48 × 48 mm
Push-In Plus Terminal Blocks
E5CD-B

For the most recent information on models that have been certified for safety standards, refer to your OMRON website.

Refer to *Safety Precautions* on 43.

Main I/O Functions

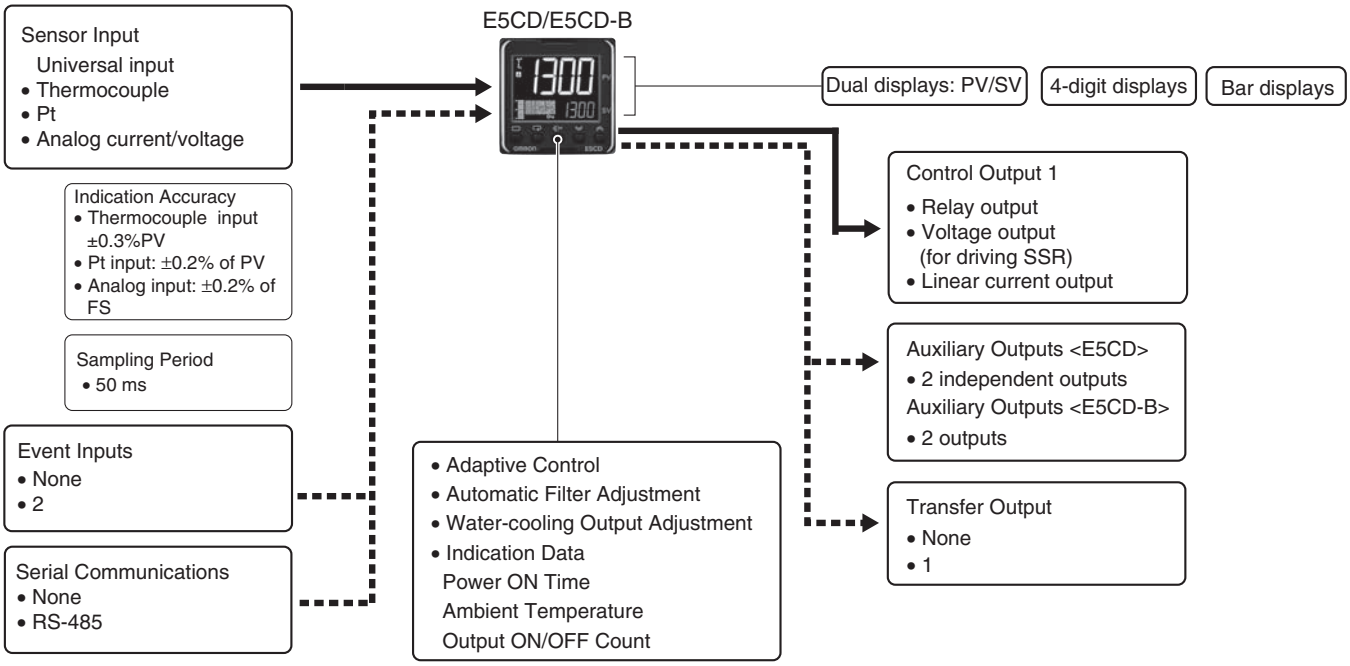

This datasheet is provided as a guideline for selecting products.
Be sure to refer to the following manuals for application precautions and other information required for operation before attempting to use the product.
E5□D Digital Temperature Controllers User's Manual (Cat. No. H224)
E5□D Digital Temperature Controllers Communications Manual (Cat. No. H225)

Model Number Legend and Standard Models

Model Number Legend

Models with Screw Terminal Blocks

E5CD-□□ 2 □ 6 M -□□□ **(Example: E5CD-RX2A6M-000)**

① ② ③ ④ ⑤ ⑥

Model	① Control outputs 1 and 2	② No. of auxiliary outputs	③ Power supply voltage	④ Terminal type	⑤ Input type	⑥ Options	Meaning	
E5CD							48 × 48 mm	
							Control output 1	Control output 2
	RX						Relay output	None
	QX						Voltage output (for driving SSR)	None
	CX						Linear current output	None
		2					2 independent outputs	
			A				100 to 240 VAC	
			D				24 VAC/DC	
				6			Screw terminal blocks (with E53-COV23 Terminal Cover), draw-out structure	
					M		Universal input	

		HB alarm and HS alarm	Communications	Event inputs	Transfer Output
	000	---	---	---	---
✻1	001	1	---	2	---
✻1	002	1	RS-485	---	---
✻2	004	---	RS-485	2	---
✻2	006	---	---	2	Provided.

✻1. This option can be selected when the control output is RX or QX.
✻2. This option can be selected when the control output is CX.

Heating and Cooling Control

Using Heating and Cooling Control

① Control Output Assignment
An auxiliary output is used as the cooling control output.
② Control
If PID control is used, you can set PID control separately for heating and cooling.
This allows you to handle control systems with different heating and cooling response characteristics.

List of Models

Model
E5CD-RX2A6M-000
E5CD-RX2D6M-000
E5CD-RX2A6M-001
E5CD-RX2D6M-001
E5CD-RX2A6M-002
E5CD-RX2D6M-002
E5CD-QX2A6M-000
E5CD-QX2D6M-000
E5CD-QX2A6M-001
E5CD-QX2D6M-001
E5CD-QX2A6M-002
E5CD-QX2D6M-002

Model
E5CD-CX2A6M-000
E5CD-CX2D6M-000
E5CD-CX2A6M-004
E5CD-CX2D6M-004
E5CD-CX2A6M-006
E5CD-CX2D6M-006

Model Number Legend

Models with Push-In Plus Terminal Blocks

E5CD-□□ 2 □ B M-□□□ (Example: E5CD-RX2ABM-000)

① ② ③ ④ ⑤ ⑥

Model	① Control outputs 1 and 2	② No. of auxiliary outputs	③ Power supply voltage	④ Terminal type	⑤ Input type	⑥ Options	Meaning	
E5CD							48 × 48 mm	
							Control output 1	Control output 2
	RX						Relay output	None
	QX						Voltage output (for driving SSR)	None
	CX						Linear current output	None
		2					2 independent outputs	
			A				100 to 240 VAC	
			D				24 VAC/DC	
				B			Push-In Plus terminal block	
					M		Universal input	

		HB alarm and HS alarm	Communications	Event inputs	Transfer Output
	000	---	---	---	---
✻1	001	1	---	2	---
✻1	002	1	RS-485	---	---
✻2	004	---	RS-485	2	---
✻2	006	---	---	2	Provided.

✻1. This option can be selected when the control output is RX or QX.
✻2. This option can be selected when the control output is CX.

Heating and Cooling Control

Using Heating and Cooling Control

① Control Output Assignment
An auxiliary output is used as the cooling control output.
② Control
If PID control is used, you can set PID control separately for heating and cooling.
This allows you to handle control systems with different heating and cooling response characteristics.

List of Models

Model
E5CD-RX2ABM-000
E5CD-RX2DBM-000
E5CD-RX2ABM-001
E5CD-RX2DBM-001
E5CD-RX2ABM-002
E5CD-RX2DBM-002
E5CD-QX2ABM-000
E5CD-QX2DBM-000
E5CD-QX2ABM-001
E5CD-QX2DBM-001
E5CD-QX2ABM-002
E5CD-QX2DBM-002

Model
E5CD-CX2ABM-000
E5CD-CX2DBM-000
E5CD-CX2ABM-004
E5CD-CX2DBM-004
E5CD-CX2ABM-006
E5CD-CX2DBM-006

Optional Products (Order Separately)

USB-Serial Conversion Cable

Model
E58-CIFQ2

Terminal Covers

(Cannot be used on a Push-In Plus terminal block type)

Model
E53-COV17
E53-COV23 (3pcs) ✻

Note: The E53-COV10 cannot be used.
Refer to page 14 for the mounted dimensions.
✻ E53-COV23 are provided with the Digital Temperature Controller.

Waterproof Packing

Model
Y92S-P8

Note: This Waterproof Packing is provided with the Digital Temperature Controller.

Current Transformers (CTs)

Hole diameter	Model
5.8 mm	**E54-CT1**
5.8 mm	**E54-CT1L✻**
12.0 mm	**E54-CT3**
12.0 mm	**E54-CT3L✻**

✻Lead wires are included with these CTs. If UL certification is required, use these CTs.

Adapter

Model
Y92F-45

Note: Use this Adapter when the panel has already been prepared for an E5B□ Controller.

Waterproof Cover

Model
Y92A-48N

Mounting Adapter

Model
Y92F-49

Note: This Mounting Adapter is provided with the Digital Temperature Controller.

DIN Track Mounting Adapter

(Cannot be used on a Push-In Plus terminal block type)

Model
Y92F-52

Front Covers

Type	Model
Hard Front Cover	**Y92A-48H**
Soft Front Cover	**Y92A-48D**

Draw-out Jig

(Cannot be used on a Push-In Plus terminal block type)

Model
Y92F-58

CX-Thermo Support Software

Model
EST2-2C-MV4

Note: CX-Thermo version 4.66 or higher is required for the E5CD.
CX-Thermo version 4.67 or higher is required for the E5CD-B.
For the system requirements for the CX-Thermo, refer to information on the EST2-2C-MV4 on the OMRON website (www.ia.omron.com).

Specifications

Ratings

Power supply voltage		A in model number: 100 to 240 VAC, 50/60 Hz D in model number: 24 VAC, 50/60 Hz; 24 VDC
Operating voltage range		85% to 110% of rated supply voltage
Power consumption		Models with option selection of 000:5.2 VA max. at 100 to 240 VAC, and 3.1 VA max. at 24 VAC or 1.6 W max. at 24 VDC All other models: 6.5 VA max. at 100 to 240 VAC, and 4.1 VA max. at 24 VAC or 2.3 W max. at 24 VDC
Sensor input		Temperature input Thermocouple: K, J, T, E, L, U, N, R, S, B, C/W, or PL II Platinum resistance thermometer: Pt100 or JPt100 Infrared temperature sensor (ES1B): 10 to 70°C, 60 to 120°C, 115 to 165°C, or 140 to 260°C Analog input Current input: 4 to 20 mA or 0 to 20 mA Voltage input: 1 to 5 V, 0 to 5 V, or 0 to 10 V
Input impedance		Current input: 150 Ω max., Voltage input: 1 MΩ min. (Use a 1:1 connection when connecting the ES2-HB-N/THB-N.)
Control method		ON/OFF control or 2-PID control (with auto-tuning)
Control output	**Relay output**	SPST-NO, 250 VAC, 3 A (resistive load), electrical life: 100,000 operations, minimum applicable load: 5 V, 10 mA (reference value)
	Voltage output (for driving SSR)	Output voltage: 12 VDC ±20% (PNP), max. load current: 21 mA, with short-circuit protection circuit
	Linear current output	4 to 20 or 0 to 20 mA DC, Load: 500 Ω max., Resolution: Approx. 10,000
Auxiliary output	**Number of outputs**	2
	Output specifications	SPST-NO relay outputs: 250 VAC, E5CD: 3 A (resistive load), E5CD-B: 2 A (resistive load) Electrical life: 100,000 operations, Minimum applicable load: 10 mA at 5 V (reference values)
Event input	**Number of inputs**	2
	External contact input specifications	Contact input: ON: 1 kΩ max., OFF: 100 kΩ min.
		Non-contact input: ON: Residual voltage: 1.5 V max., OFF: Leakage current: 0.1 mA max.
		Current flow: Approx. 7 mA per contact
Transfer Output	**Number of outputs**	1 (depends on model): Transfer output type
	Output specifications	Current output: 4 to 20 mA DC, Load: 500 Ω, Resolution: Approx. 10,000 Linear voltage output: 1 to 5 V DC, Load: 1 kΩ min., Resolution: Approx. 10,000
Setting method		Digital setting using front panel keys
Indication method		11-segment digital display, individual indicators, and bar display Character height: PV: 14.9 mm, SV: 7.1 mm
Multi SP ✻		Up to eight set points (SP0 to SP7) can be saved and selected using the event inputs, key operations, or serial communications.
Bank switching		None
Other functions		Adaptive control, automatic filter adjustment, water-cooling output adjustment, indication data (power ON time monitor, ambient temperature monitor, and control output ON/OFF count monitors), parameter masking, operation after power ON, manual output, heating/cooling control, loop burnout alarm, SP ramp, other alarm functions, heater burnout (HB) alarm (including SSR failure (HS) alarm), 40% AT, 100% AT, MV limiter, input digital filter, robust tuning, PV input shift, run/stop, protection functions, extraction of square root, MV change rate limit, logic operations, temperature status display, simple programming, moving average of input value, and display brightness setting
Ambient operating temperature		–10 to 55°C (with no condensation or icing), For 3-year warranty: –10 to 50°C with standard mounting (with no condensation or icing)
Ambient operating humidity		25% to 85%
Storage temperature		–25 to 65°C (with no condensation or icing)
Altitude		2,000 m max.
Recommended fuse		T2A, 250 VAC, time-lag, low-breaking capacity
Installation environment		Overvoltage category II, Pollution Degree 2 (EN/IEC/UL 61010-1)

✻There can be up to four set points if event inputs are used to select them.

Input Ranges

Thermocouple/Platinum Resistance Thermometer (Universal inputs)

Sensor type	Platinum resistance thermometer					Thermocouple																Infrared temperature sensor			
Sensor specification	Pt100			JPt100		K		J		T		E	L	U		N	R	S	B	C/W	PLII	10 to 70°C	60 to 120°C	115 to 165°C	140 to 260°C
Temperature range (°C)	850	500.0	100.0	500.0	100.0	1300	500.0	850	400.0	400	400.0	600	850	400	400.0	1300	1700	1700	1800	2300	1300	90	120	165	260
			0.0		0.0		−20.0	−100	−20.0				−100				0	0	0	0	0	0	0	0	0
	−200	−199.9		−199.9		−200				−200	−199.9	−200		−200	−199.9	−200									
Set value	0	1	2	3	4	5	6	7	8	9	10	11	12	13	14	15	16	17	18	19	20	21	22	23	24

Shaded settings are the default settings.

The applicable standards for the input types are as follows:

K, J, T, E, N, R, S, B: JIS C 1602-2015, IEC 60584-1
L: Fe-CuNi, DIN 43710-1985
U: Cu-CuNi, DIN 43710-1985
C/W: W5Re/W26Re, JIS C1602-2015, ASTM E988-1990
JPt100: JIS C 1604-1989, JIS C 1606-1989
Pt100: JIS C 1604-1997, IEC 60751
PL II: According to Platinel II electromotive force charts from BASF (previously Engelhard)

Analog input

Input type	Current		Voltage		
Input specification	4 to 20 mA	0 to 20 mA	1 to 5 V	0 to 5 V	0 to 10 V
Setting range	Usable in the following ranges by scaling: -1999 to 9999, -199.9 to 999.9, -19.99 to 99.99 or -1.999 to 9.999				
Set value	25	26	27	28	29

Alarm Types

Each alarm can be independently set to one of the following 17 alarm types. The default is 2: Upper limit. (see note.)
Auxiliary outputs are allocated for alarms. ON delays and OFF delays (0 to 999 s) can also be specified.

Note: In the default settings for models with HB or HS alarms, alarm 1 is set to a heater alarm (HA) and the Alarm Type 1 parameter is not displayed. To use alarm 1, set the output assignment to alarm 1.

Set value	Alarm type	Alarm output operation		Description of function
		When alarm value X is positive	When alarm value X is negative	
0	Alarm function OFF	Output OFF		No alarm
1	Upper- and lower-limit ✻1		✻2	Set the upward deviation in the set point for the alarm upper limit (H) and the lower deviation in the set point for the alarm lower limit (L). The alarm is ON when the PV is outside this deviation range.
2 (default)	Upper-limit	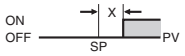		Set the upward deviation in the set point by setting the alarm value (X). The alarm is ON when the PV is higher than the SP by the deviation or more.
3	Lower-limit		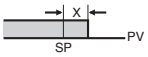	Set the downward deviation in the set point by setting the alarm value (X). The alarm is ON when the PV is lower than the SP by the deviation or more.
4	Upper- and lower-limit range ✻1	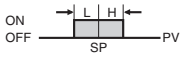	✻3	Set the upward deviation in the set point for the alarm upper limit (H) and the lower deviation in the set point for the alarm lower limit (L). The alarm is ON when the PV is inside this deviation range.
5	Upper- and lower-limit with standby sequence ✻1	✻5	✻4	A standby sequence is added to the upper- and lower-limit alarm (1). ✻6
6	Upper-limit with standby sequence	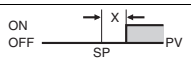		A standby sequence is added to the upper-limit alarm (2). ✻6
7	Lower-limit with standby sequence		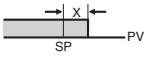	A standby sequence is added to the lower-limit alarm (3). ✻6
8	Absolute-value upper-limit	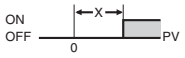	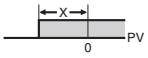	The alarm will turn ON if the process value is larger than the alarm value (X) regardless of the set point.
9	Absolute-value lower-limit	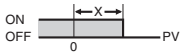	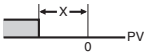	The alarm will turn ON if the process value is smaller than the alarm value (X) regardless of the set point.
10	Absolute-value upper-limit with standby sequence	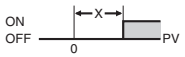	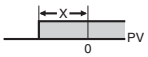	A standby sequence is added to the absolute-value upper-limit alarm (8). ✻6
11	Absolute-value lower-limit with standby sequence	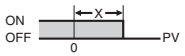	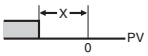	A standby sequence is added to the absolute-value lower-limit alarm (9). ✻6
12	LBA (alarm 1 type only)	-		✻7
13	PV change rate alarm	-		✻8
14	SP absolute-value upper-limit alarm	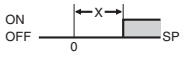	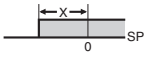	This alarm type turns ON the alarm when the set point (SP) is higher than the alarm value (X).
15	SP absolute-value lower-limit alarm	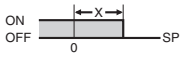	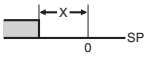	This alarm type turns ON the alarm when the set point (SP) is lower than the alarm value (X).
16	MV absolute-value upper-limit alarm ✻9	Standard Control 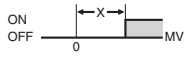 Heating/Cooling Control (Heating MV) 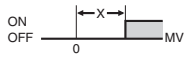	Standard Control 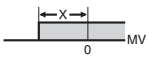 Heating/Cooling Control (Heating MV) Always ON	This alarm type turns ON the alarm when the manipulated variable (MV) is higher than the alarm value (X).
17	MV absolute-value lower-limit alarm ✻9	Standard Control 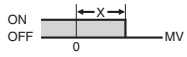 Heating/Cooling Control (Cooling MV) 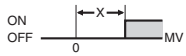	Standard Control 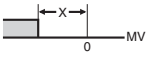 Heating/Cooling Control (Cooling MV) Always ON	This alarm type turns ON the alarm when the manipulated variable (MV) is lower than the alarm value (X).

✻1. With set values 1, 4 and 5, the upper and lower limit values can be set independently for each alarm type, and are expressed as “L” and “H.”

✻2. Set value: 1, Upper- and lower-limit alarm

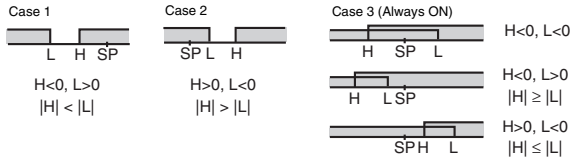

✻3. Set value: 4, Upper- and lower-limit range

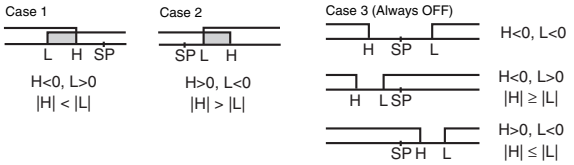

✻4. Set value: 5, Upper- and lower-limit with standby sequence

For Upper- and Lower-Limit Alarm Described Above *2

- Case 1 and 2

Always OFF when the upper-limit and lower-limit hysteresis overlaps.

- Case 3: Always OFF

✻5. Set value: 5, Upper- and lower-limit with standby sequence

Always OFF when the upper-limit and lower-limit hysteresis overlaps.

✻6. Refer to the *E5□D Digital Temperature Controllers User's Manual* (Cat. No. H224) for information on the operation of the standby sequence.

✻7. Refer to the *E5□D Digital Temperature Controllers User's Manual* (Cat. No.H224) for information on the loop burnout alarm (LBA).

✻8. Refer to the *E5□D Digital Temperature Controllers User's Manual* (Cat. No. H224) for information on the PV change rate alarm.

✻9. When heating/cooling control is performed, the MV absolute upper limit alarm functions only for the heating operation and the MV absolute lower limit alarm functions only for the cooling operation.

Characteristics

Indication accuracy (at the ambient temperature of 23°C)		Thermocouple: (±0.3% of indication value or ±1°C, whichever is greater) ±1 digit max. ✻1 Platinum resistance thermometer: (±0.2% of indication value or ±0.8°C, whichever is greater) ±1 digit max. Analog input: ±0.2% FS ±1 digit max. CT input: ±5% FS ±1 digit max.
Transfer output accuracy		±0.3% FS max.
Influence of temperature ✻2		Thermocouple input (R, S, B, C/W, PL II): (±1% of indication value or ±10°C, whichever is greater) ±1 digit max. Other thermocouple input: (±1% of indication value or ±4°C, whichever is greater) ±1 digit max. ✻3 Platinum resistance thermometer: (±1% of indication value or ±2°C, whichever is greater) ±1 digit max. Analog input: ±1%FS ±1 digit max. CT input: ±5% FS ±1 digit max.
Influence of voltage ✻2		
Influence of EMS. (at EN 61326-1)		
Input sampling period		50 ms
Hysteresis		Temperature input: 0.1 to 999.9°C or °F (in units of 0.1°C or °F) Analog input: 0.01% to 99.99% FS (in units of 0.01% FS)
Proportional band (P)		Temperature input: 0.1 to 999.9°C or °F (in units of 0.1°C or °F) Analog input: 0.1% to 999.9% FS (in units of 0.1% FS)
Integral time (I)		0 to 9999 s (in units of 1 s), 0.0 to 999.9 s (in units of 0.1 s) ✻4
Derivative time (D)		0 to 9999 s (in units of 1 s), 0.0 to 999.9 s (in units of 0.1 s) ✻4
Proportional band (P) for cooling		Temperature input: 0.1 to 999.9°C or °F (in units of 0.1°C or °F) Analog input: 0.1% to 999.9% FS (in units of 0.1% FS)
Integral time (I) for cooling		0 to 9999 s (in units of 1 s), 0.0 to 999.9 s (in units of 0.1 s) ✻4
Derivative time (D) for cooling		0 to 9999 s (in units of 1 s), 0.0 to 999.9 s (in units of 0.1 s) ✻4
For adaptive control	**SP response proportional band**	Temperature input: 0.1 to 999.9°C or °F (in units of 0.1°C or °F)
	SP response integral time	0 to 9999 s (in units of 1 s), 0.0 to 999.9 s (in units of 0.1 s) ✻4
	SP response derivative time	0 to 9999 s (in units of 1 s), 0.0 to 999.9 s (in units of 0.1 s) ✻4
	Disturbance proportional band	Temperature input: 0.1 to 999.9°C or °F (in units of 0.1°C or °F)
	Disturbance integral time	0 to 9999 s (in units of 1 s), 0.0 to 999.9 s (in units of 0.1 s)✻4
	Disturbance derivative time	0 to 9999 s (in units of 1 s), 0.0 to 999.9 s (in units of 0.1 s) ✻4
Control period		0.1, 0.2, 0.5, 1 to 99 s (in units of 1 s)
Manual reset value		0.0 to 100.0% (in units of 0.1%)
Alarm setting range		−1999 to 9999 (decimal point position depends on input type)
Influence of signal source resistance		Thermocouple: 0.1°C/Ω max. (100 Ω max.) Platinum resistance thermometer: 0.1°C/Ω max. (10 Ω max.)
Insulation resistance		20 MΩ min. (at 500 VDC)
Dielectric strength		3,000 VAC, 50/60 Hz for 1 min between terminals of different charge
Vibration	**Malfunction**	10 to 55 Hz, 20 m/s^2 for 10 min each in X, Y, and Z directions
	Resistance	10 to 55 Hz, 20 m/s^2 for 2 hrs each in X, Y, and Z directions
Shock	**Malfunction**	100 m/s^2, 3 times each in X, Y, and Z directions
	Resistance	300 m/s^2, 3 times each in X, Y, and Z directions
Weight		Controller: Approx. 120 g, Mounting Adapter: Approx. 10 g
Degree of protection		Front panel: IP66, Rear case: IP20, Terminals: IP00
Memory protection		Non-volatile memory (number of writes: 1,000,000 times)
Setup Tool		E5CD: CX-Thermo version 4.66 or higher E5CD-B: CX-Thermo version 4.67 or higher
Setup Tool port		E5CD/E5CD-B top panel: An E58-CIFQ2 USB-Serial Conversion Cable is used to connect to a USB port on the computer.✻5
Standards	**Approved standards**	cULus: UL 61010-1/CSA C22.2 No.61010-1, Korean wireless regulations (Radio law: KC Mark)
	Conformed standards	EN 61010-1 (IEC 61010-1) and RCM standards
EMC		EMI: EN 61326-1 ✻6 Radiated Interference Electromagnetic Field Strength: EN 55011 Group 1, class A Noise Terminal Voltage: EN 55011 Group 1, class A EMS: EN 61326-1 ✻6 ESD Immunity: EN 61000-4-2 Electromagnetic Field Immunity: EN 61000-4-3 Burst Noise Immunity: EN 61000-4-4 Conducted Disturbance Immunity: EN 61000-4-6 Surge Immunity: EN 61000-4-5 Voltage Dip/Interrupting Immunity: EN 61000-4-11

✻**1.** The indication accuracy of K thermocouples in the −200 to 1,300°C range, T and N thermocouples at a temperature of −100°C max., and U and L thermocouples at any temperatures is ±2°C ±1 digit max. The indication accuracy of the B thermocouple at a temperature of 400°C max. is not specified. The indication accuracy of B thermocouples at a temperature of 400 to 800°C is ±3°C max. The indication accuracy of the R and S thermocouples at a temperature of 200°C max. is ±3°C ±1 digit max. The indication accuracy of C/W thermocouples is (±0.3% of PV or ±3°C, whichever is greater) ±1 digit max. The indication accuracy of PL II thermocouples is (±0.3% of PV or ±2°C, whichever is greater) ±1 digit max.
✻**2.** Ambient temperature: −10°C to 23°C to 55°C, Voltage range: −15% to 10% of rated voltage
✻**3.** K thermocouple at −100°C max.: ±10°C max.
✻**4.** The unit is determined by the setting of the Integral/Derivative Time Unit parameter.
✻**5.** External communications (RS-485) and USB-serial conversion cable communications can be used at the same time.
✻**6.** Industrial electromagnetic environment (EN/IEC 61326-1 Table 2)

USB-Serial Conversion Cable

Applicable OS	Windows XP/Vista/7/8/10 ✻1
Applicable software	CX-Thermo version 4.66 or higher (E5CD-B: version 4.67 or higher)
Applicable models	E5□C-T Series, E5□C Series, E5CB Series, and E5□D Series
USB interface standard	Conforms to USB Specification 2.0.
DTE speed	38,400 bps
Connector specifications	Computer: USB (type A plug) Digital Temperature Controller: Special serial connector
Power supply	Bus power (Supplied from USB host controller.)✻2
Power supply voltage	5 VDC
Current consumption	450 mA max.
Output voltage	4.7±0.2 VDC (Supplied from USB-Serial Conversion Cable to the Digital Temperature Controller.)
Output current	250 mA max. (Supplied from USB-Serial Conversion Cable to the Digital Temperature Controller.)
Ambient operating temperature	0 to 55°C (with no condensation or icing)
Ambient operating humidity	10% to 80%
Storage temperature	–20 to 60°C (with no condensation or icing)
Storage humidity	10% to 80%
Altitude	2,000 m max.
Weight	Approx. 120 g

Windows is a registered trademark of Microsoft Corporation in the United States and or other countries.

✻1. CX-Thermo version 4.65 or higher runs on Windows 10.

✻2. Use a high-power port for the USB port.

Note: A driver must be installed on the computer. Refer to the *Instruction Manual* included with the Cable for the installation procedure.

Communications Specifications

Transmission line connection method	RS-485: Multidrop
Communications	RS-485 (two-wire, half duplex)
Synchronization method	Start-stop synchronization
Protocol	CompoWay/F, or Modbus
Baud rate ✻	9,600, 19,200, 38,400, 57,600, or 115,200 bps
Transmission code	ASCII
Data bit length ✻	7 or 8 bits
Stop bit length ✻	1 or 2 bits
Error detection	Vertical parity (none, even, odd) Block check character (BCC) with CompoWay/F or CRC-16 Modbus
Flow control	None
Interface	RS-485
Retry function	None
Communications buffer	217 bytes
Communications response wait time	0 to 99 ms Default: 20 ms

✻ The baud rate, data bit length, stop bit length, and vertical parity can be individually set using the Communications Setting Level.

Communications Functions

Programless communications	You can use the memory in the PLC to read and write E5CD/E5CD-B parameters, start and stop operation, etc. The E5CD/E5CD-B automatically performs communications with PLCs. No communications programming is required. Number of connected Digital Temperature Controllers: 32 max. (Up to 16 for the FX3) Applicable PLCs OMRON PLCs: CS Series, CJ Series, CP Series, NJ Series, or NX1P Mitsubishi Electric PLCs: MELSEC Q Series, L Series, FX3 Series, or iQ-R Series KEYENCE PLCs: KEYENCE KV Series
Copying ✻	When Digital Temperature Controllers are connected, the parameters can be copied from the Digital Temperature Controller that is set as the master to the Digital Temperature Controllers that are set as slaves.

MELSEC is a registered trademark of Mitsubishi Electric Corporation.
KEYENCE is a registered trademark of Keyence Corporation.

✻Programless communications supports the copying function.

Current Transformer (Order Separately) Ratings

	E54-CT1 E54-CT3	E54-CT1L E54-CT3L
Dielectric strength	1,000 VAC for 1 min	1,500 VAC for 1 min
Vibration resistance	50 Hz, 98 m/s^2	
Weight	E54-CT1: Approx. 11.5 g E54-CT3: Approx. 50 g	E54-CT1L: Approx. 14 g E54-CT3L: Approx. 57 g
Accessories	E54-CT3 Only Armatures (2) Plugs (2)	None

Heater Burnout Alarms and SSR Failure Alarms

CT input (for heater current detection)	Models with detection for single-phase heaters: One input
Maximum heater current	50 A AC
Input current indication accuracy	±5% FS ±1 digit max.
Heater burnout alarm setting range ✻1	0.1 to 49.9 A (in units of 0.1 A) Minimum detection ON time: 100 ms ✻3
SSR failure alarm setting range ✻2	0.1 to 49.9 A (in units of 0.1 A) Minimum detection OFF time: 100 ms ✻4

✻1. For heater burnout alarms, the heater current will be measured when the control output is ON, and the output will turn ON if the heater current is lower than the set value (i.e., heater burnout detection current value).

✻2. For SSR failure alarms, the heater current will be measured when the control output is OFF, and the output will turn ON if the heater current is higher than the set value (i.e., SSR failure detection current value).

✻3. The value is 30 ms for a control period of 0.1 s or 0.2 s.

✻4. The value is 38 ms for a control period of 0.1 s or 0.2 s.

Electrical Life Expectancy Curve for Control Output Relay (Reference Values)

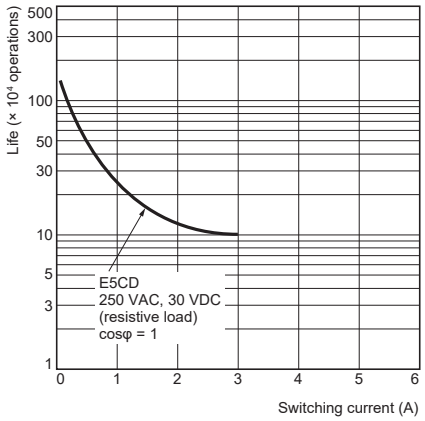

External Connections

E5CD (Screw Terminal Blocks)

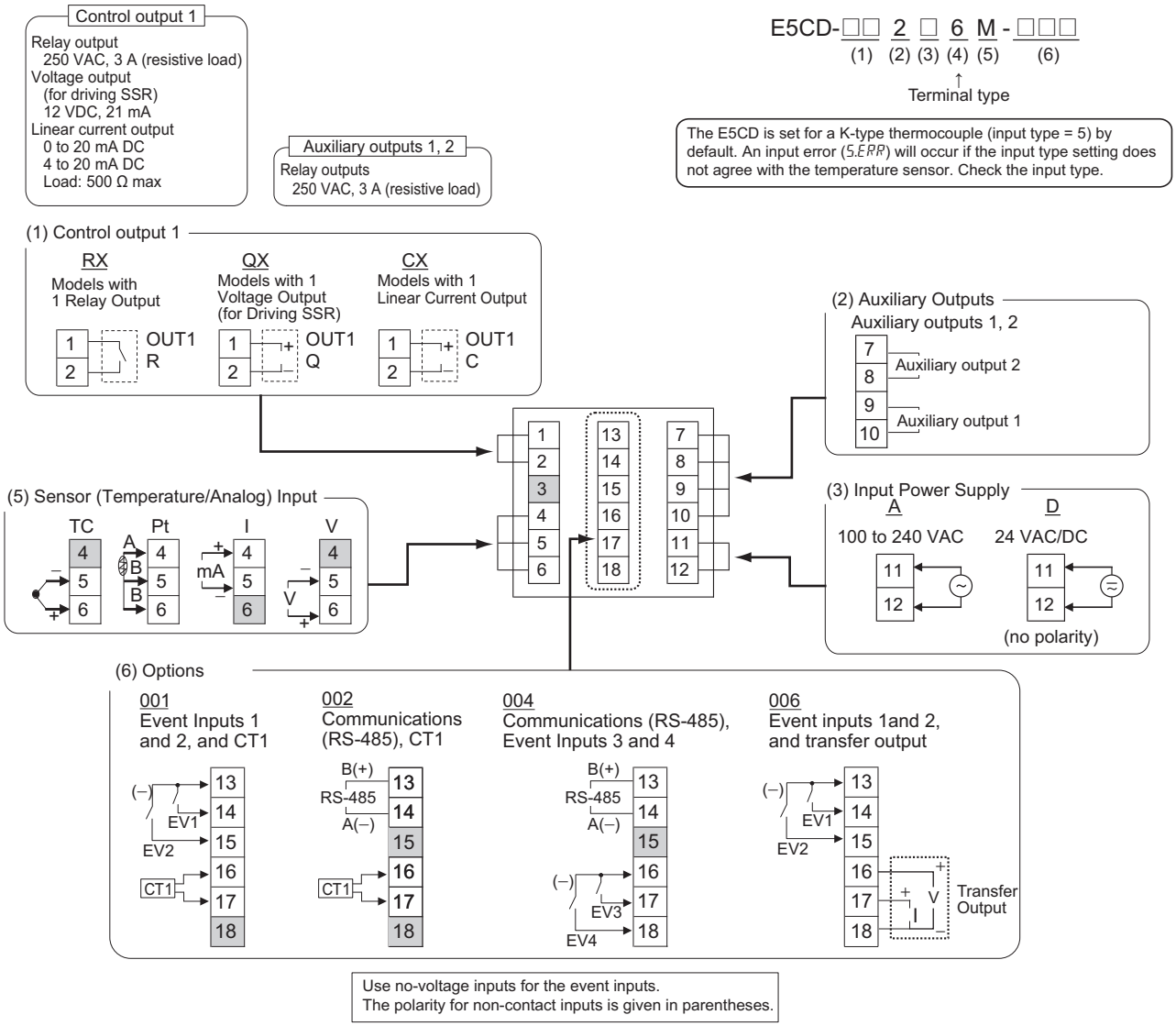

Note: 1. The application of the terminals depends on the model.
2. Do not wire the terminals that are shown with a gray background.
3. When complying with EMC standards, the cable that connects the sensor must be 30 m or less.
If the cable length exceeds 30 m, compliance with EMC standards will not be possible.
4. Connect M3 crimped terminals.
5. Due to UL Listing requirements, use the E54-CT1L or E54-CT3L Current Transformer with the factory wiring (internal wiring).
Use a UL category XOBA or XOBA7 current transformer that is UL Listed for field wiring (external wiring) and not the factory wiring (internal wiring).

E5CD-B (Push-In Plus Terminal Blocks)

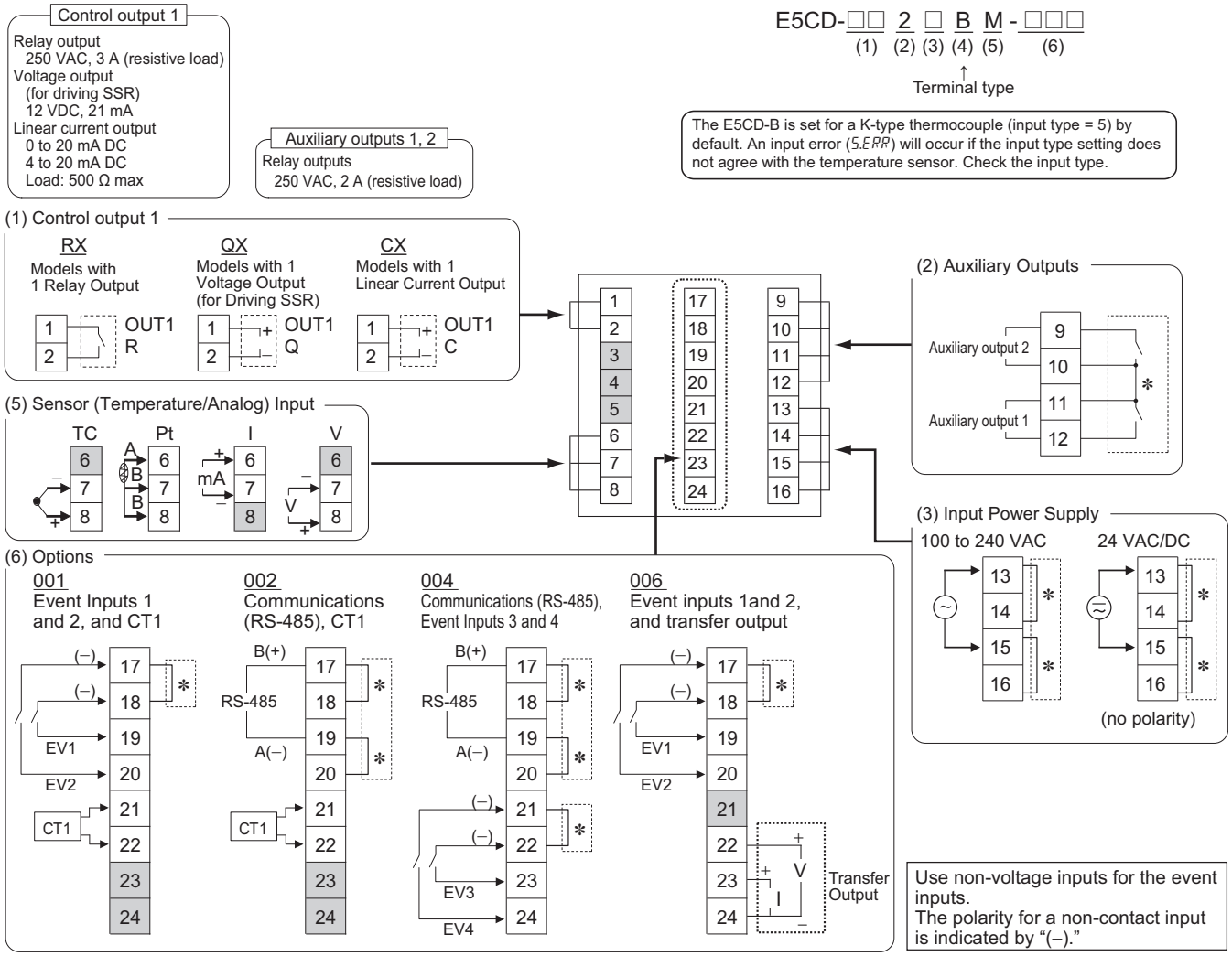

Note: 1. The application of the terminals depends on the model.

2. Do not wire the terminals that are shown with a gray background.

3. When complying with EMC standards, the cable that connects the sensor must be 30 m or less.
If the cable length exceeds 30 m, compliance with EMC standards will not be possible.

4. Refer to *E5□D-B (Push-In Plus terminal block types)* on page 48 for wire specifications and wiring methods.

5. Common terminals are indicated with asterisks (*).
You can use the input power supply and communications common terminals for crossover wiring.
Controllers given below if you use crossover wiring for the input power supply.
100 to 240 VAC Controllers: 16 max.
24 VAC/VDC Controllers: 8 max.

Wiring Example:

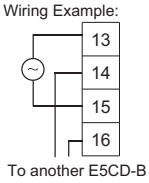

6. Due to UL Listing requirements, use the E54-CT1L or E54-CT3L Current Transformer with the factory wiring (internal wiring).
Use a UL category XOBA or XOBA7 current transformer that is UL Listed for field wiring (external wiring) and not the factory wiring (internal wiring).

Isolation/Insulation Block Diagrams

E5CD

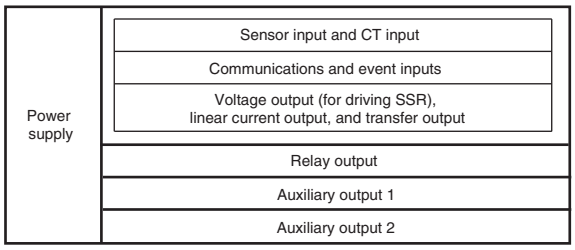

: Reinforced insulation

: Functional isolation

E5CD-B

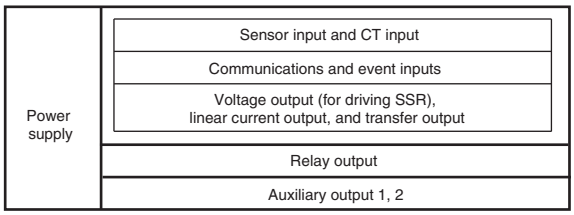

: Reinforced insulation

: Functional isolation

Nomenclature

E5CD/E5CD-B

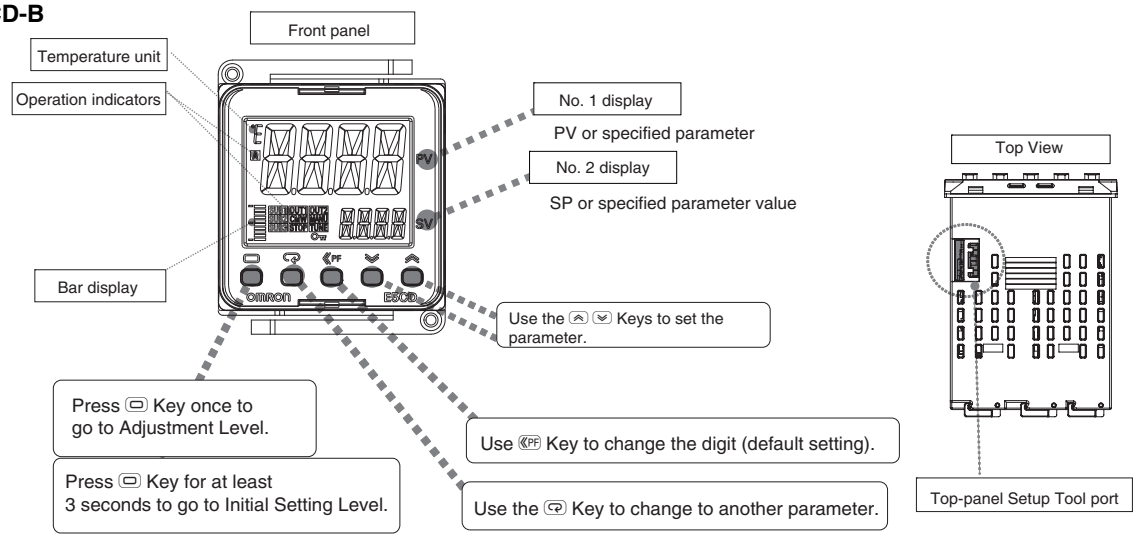

Dimensions

(Unit: mm)

Controllers

E5CD

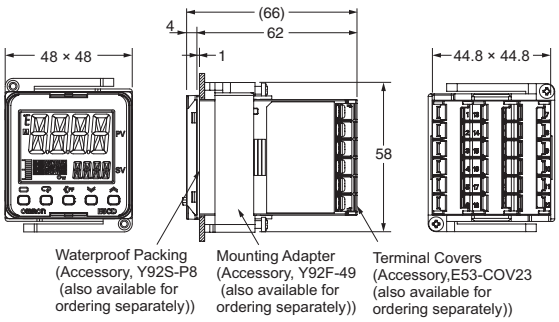

With Terminal Covers (E53-COV17, Order separately) Mounted

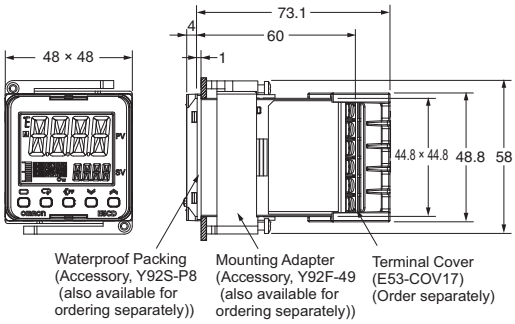

Panel Cutout

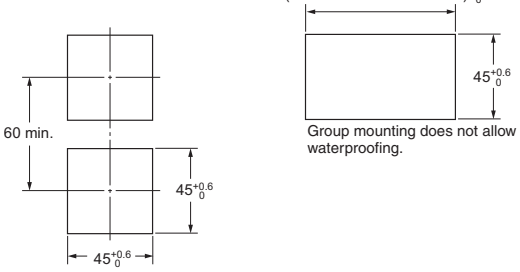

- Recommended panel thickness is 1 to 5 mm.
- Group mounting is not possible in the vertical direction. (Maintain the specified mounting space between Controllers.)
- To mount the Controller so that it is waterproof, insert the waterproof packing onto the Controller.
- When two or more Controllers are mounted, make sure that the surrounding temperature does not exceed the allowable operating temperature specified in the specifications.
- Use a control panel thickness of 1 to 3 mm if the Y92A-48N and a USB-Serial Conversion Cable are used together.
- Use a control panel thickness of 1 to 3 mm if the Y92S-P8 and a USB-Serial Conversion Cable are used together.

E5CD-B

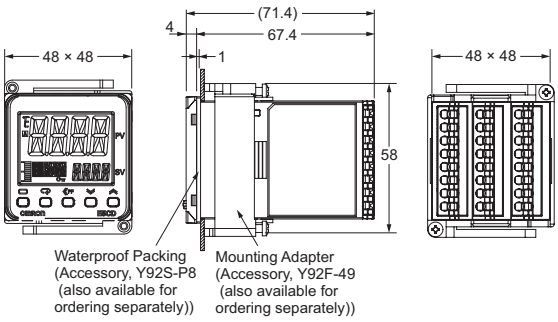

The Setup Tool port is on the top of the Digital Temperature Controller.
It is used to connect the Digital Temperature Controller to the computer to use the Setup Tool.
The E58-CIFQ2 USB-Serial Conversion Cable is required to make the connection.
Refer to the instructions that are provided with the USB-Serial Conversion Cable for the connection procedure.

Note: Do not leave the USB-Serial Conversion Cable connected when you use the Digital Temperature Controller.

Accessories (Order Separately)

USB-Serial Conversion Cable

E58-CIFQ2

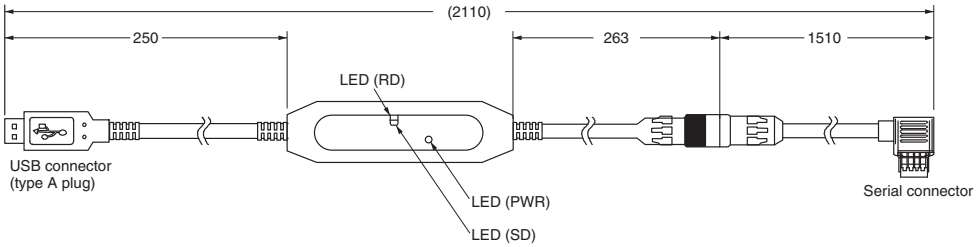

Terminal Covers (Cannot be used on a Push-In Plus terminal block type)

E53-COV17

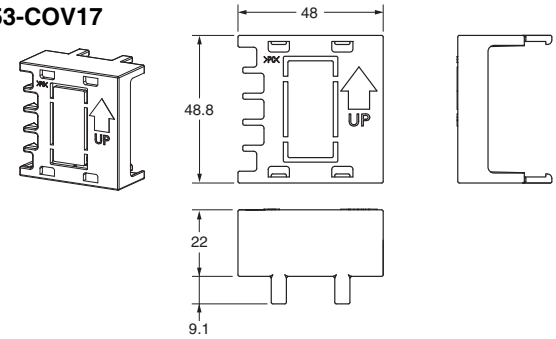

Terminal Covers (Cannot be used on a Push-In Plus terminal block type)

E53-COV23 (Three Covers provided.)

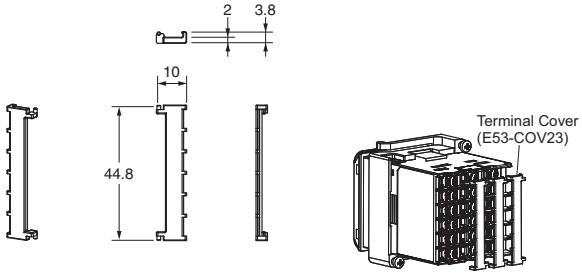

The Terminal Covers are provided with the Digital Temperature Controller.
Order the Terminal Cover separately if it becomes lost or damaged.

Waterproof Packing

Y92S-P8 (for DIN 48 × 48)

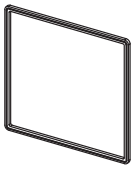

The Waterproof Packing is provided with the Digital Temperature Controller.
Order the Waterproof Packing separately if it becomes lost or damaged.
The Waterproof Packing can be used to achieve an IP66 degree of protection.
(Deterioration, shrinking, or hardening of the waterproof packing may occur depending on the operating environment. Therefore, periodic replacement is recommended to ensure the level of waterproofing specified in IP66. The time for periodic replacement depends on the operating environment.
Be sure to confirm this point at your site. Consider three years as rough standard.)

Current Transformers

E54-CT1

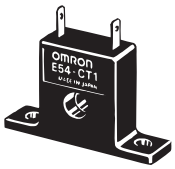

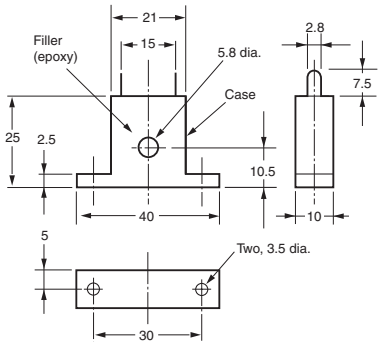

E54-CT1L

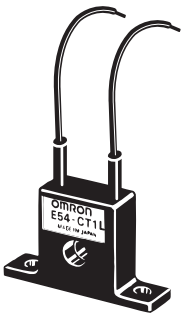

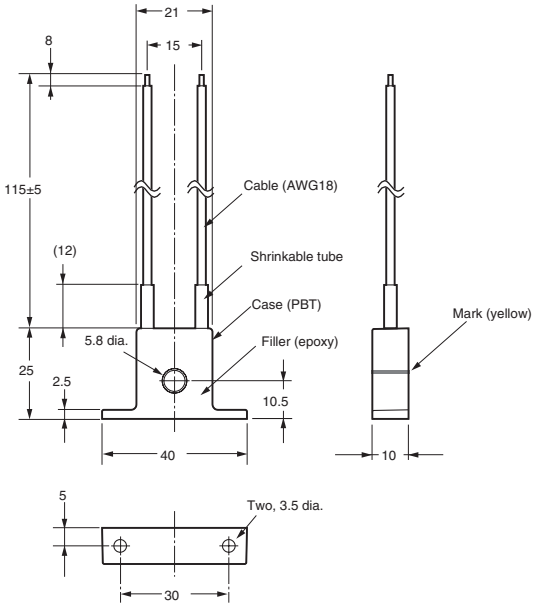

Thru-current (Io) vs. Output Voltage (Eo) (Reference Values) E54-CT1 or E54-CT1L

Maximum continuous heater current: 50 A (50/60 Hz)
Number of windings: 400±2
Winding resistance: 18±2 Ω

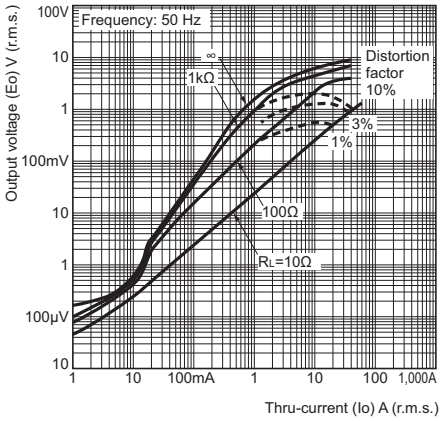

E54-CT3

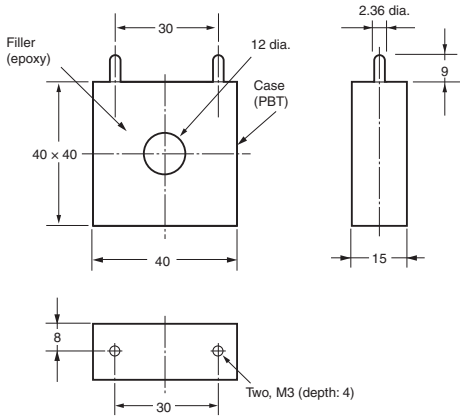

E54-CT3 Accessories

- **Armature**

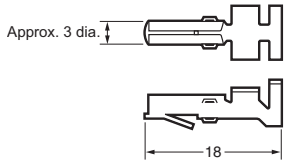

- **Plug**

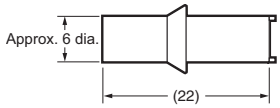

Connection Example

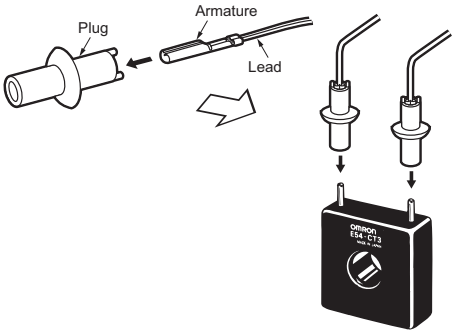

Thru-current (Io) vs. Output Voltage (Eo) (Reference Values) E54-CT3 or E54-CT3L

Maximum continuous heater current: 120 A (50/60 Hz)
(Maximum continuous heater current for an OMRON Digital Temperature Controller is 50 A.)

Number of windings:	400±2
Winding resistance:	8±0.8 Ω

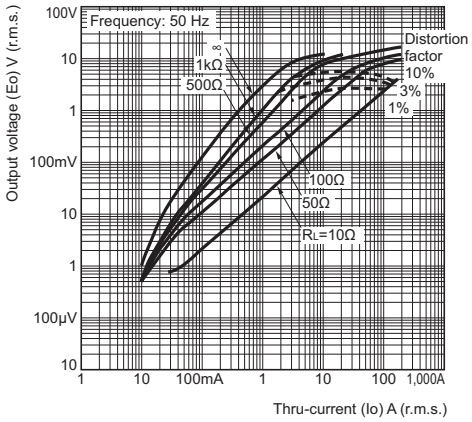

E54-CT3L

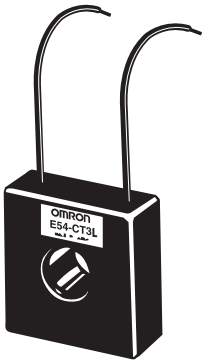

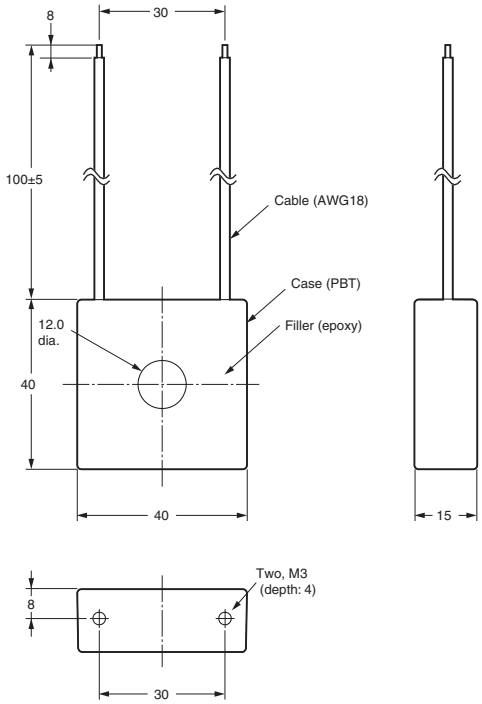

Adapter

Y92F-45

Note: 1. Use this Adapter when the Front Panel has already been prepared for the E5B□.
2. Only black is available.
3. You cannot use the E58-CIFQ2 USB-Serial Conversion Cable if you use the Y92F-45 Adapter. To use the USB-Serial Conversion Cable to make the settings, do so before you mount the Digital Temperature Controller in the panel.
4. You cannot use it together with the Y92F-49 Adapter that is enclosed with the Controller.

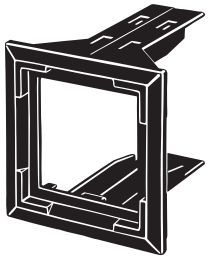

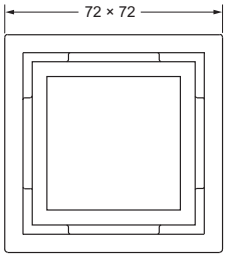

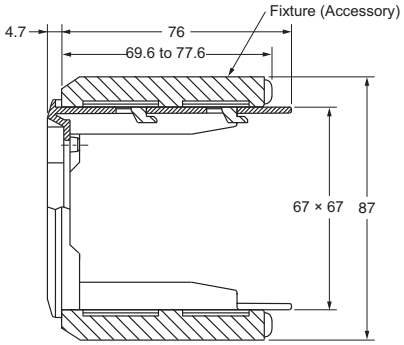

Mounting Example

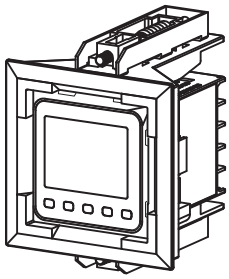

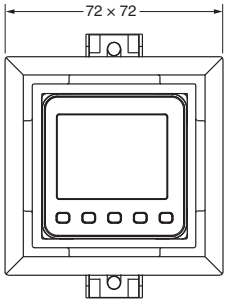

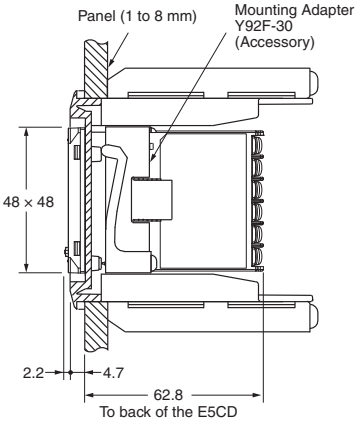

DIN Track Mounting Adapter (Cannot be used on a Push-In Plus terminal block type)

Y92F-52

Note: This Adapter cannot be used together with the Terminal Cover.
Remove the Terminal Cover to use the Adapter.

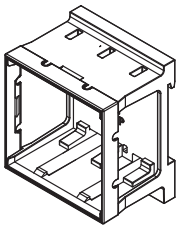

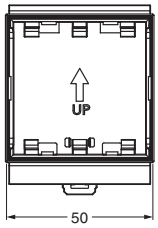

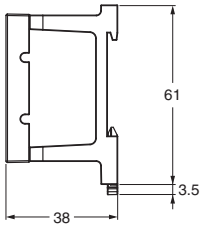

This Adapter is used to mount the E5CD to a DIN Track.
If you use the Adapter, there is no need for a plate to mount in the panel or to drill mounting holes in the panel.

Mounting Example

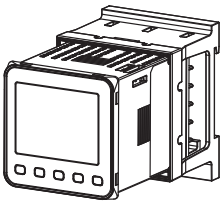

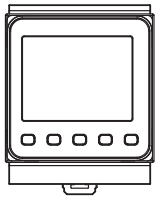

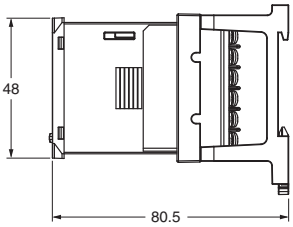

Waterproof Cover
Y92A-48N

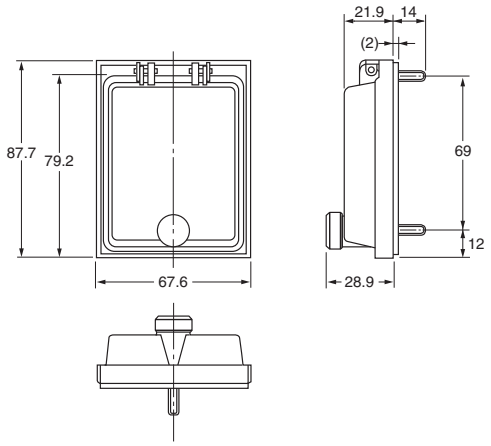

Mounting Adapter
Y92F-49

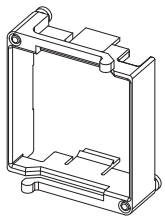

The Mounting Adapter is provided with the Digital Temperature Controller. Order this Adapter separately if it becomes lost or damaged.

Front Cover
Y92A-48D

Note: This Front Cover cannot be used if the Waterproof Packing is installed.

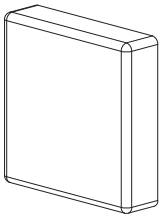

This Front Cover is soft type.
It is able to operate the controller with using this cover.

Front Cover
Y92A-48H

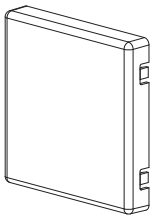

This Front Cover is hard type.
Please use it for the mis-operation prevention etc.

Draw-out Jig (Cannot be used on a Push-In Plus terminal block type)
Y92F-58

Use this Draw-out Jig to remove the interior body of the Digital Temperature Controller from the case to perform maintenance without removing the terminal wiring.

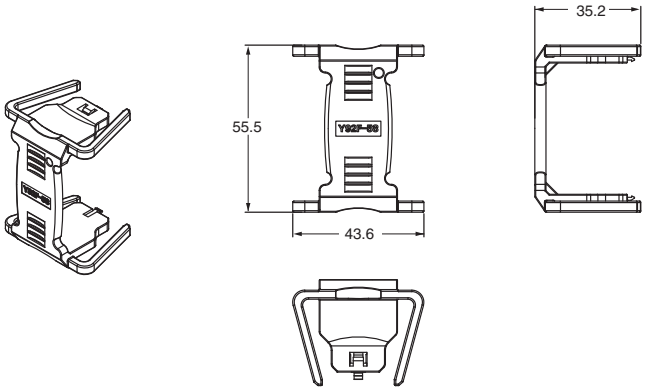

Digital Temperature Controller
E5ED/E5ED-B (48 × 96 mm)

Optimize Control by Detecting Status Changes.
Easily Satisfy Both Productivity and Quality.
Models with Push-In Plus technology Added to Lineup.

- Automatic optimization of control for changes in systems (Adaptive Control).
- Functions specialized for packaging machines (Temperature Sensors for Packaging Machines and Automatic Filter Adjustment).
- Function specialized for water-cooled extruders (Water-cooling Output Adjustment).
- Indication data (Power ON Time, Ambient Temperature, and Output ON/OFF Count).
- Basic performance is same as the E5□C standard models.
- Draw-out structure for easy maintenance. (Screw terminal blocks only)

48 × 96 mm
Screw Terminal Blocks
E5ED

48 × 96 mm
Push-In Plus Terminal Blocks
E5ED-B

For the most recent information on models that have been certified for safety standards, refer to your OMRON website.

⚠ **Refer to *Safety Precautions* on 43.**

Main I/O Functions

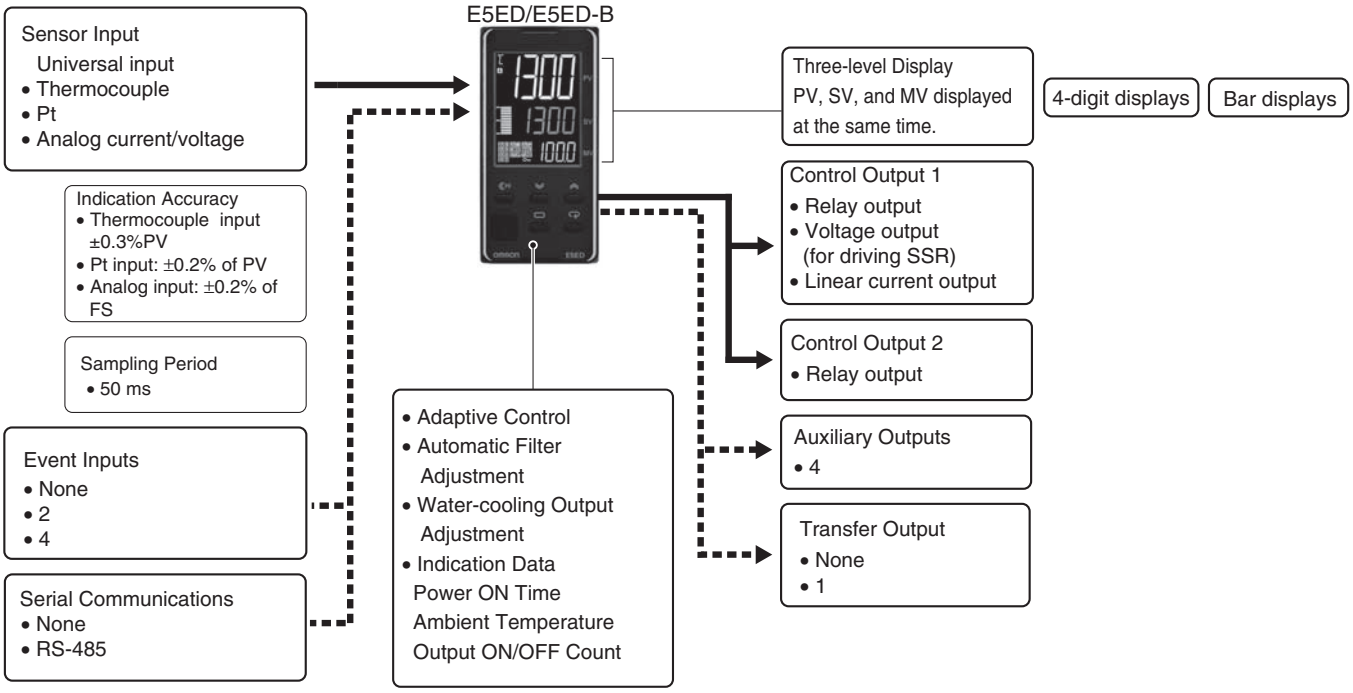

This datasheet is provided as a guideline for selecting products.
Be sure to refer to the following manuals for application precautions and other information required for operation before attempting to use the product.
E5□D Digital Temperature Controllers User's Manual (Cat. No. H224)
E5□D Digital Temperature Controllers Communications Manual (Cat. No. H225)

Model Number Legend and Standard Models

Model Number Legend

Models with Screw Terminal Blocks

E5ED-□□ 4 □ 6 M -□□□ (Example: E5ED-RX4A6M-000)

① ② ③ ④ ⑤ ⑥

Model	① Control outputs 1 and 2	② No. of auxiliary outputs	③ Power supply voltage	④ Terminal type	⑤ Input type	⑥ Options	Meaning	
E5ED							48 × 96 mm	
							Control output 1	Control output 2
	RX						Relay output	None
	QX						Voltage output (for driving SSR)	None
	CX						Linear current output	None
	QR						Voltage output (for driving SSR)	Relay output
	RR						Relay output	Relay output
		4					4 (auxiliary outputs 1 and 2 with same common and auxiliary outputs 3 and 4 with same common)	
			A				100 to 240 VAC	
			D				24 VAC/DC	
				6			Screw terminal blocks (with E53-COV24 Terminal Cover), draw-out structure	
					M		Universal input	

		HB alarm and HS alarm	Communications	Event inputs	Transfer Output
	000	---	---	---	---
✻1	004	---	RS-485	2	---
✻2	008	1	RS-485	2	---
✻3	010	1	---	4	---
✻1	022	---	RS-485	4	Provided.

✻1. This option can be selected when the control output is CX.
✻2. This option can be selected when the control output is RX, QX, QR, or RR.
✻3. This option can be selected when the control output is RX or QX.

Heating and Cooling Control

Using Heating and Cooling Control

① Control Output Assignment
If there is no control output 2, an auxiliary output is used as the cooling control output.
If there is a control output 2, the two control outputs are used for heating and cooling. (It does not matter which output is used for heating and which output is used for cooling.)
② Control
If PID control is used, you can set PID control separately for heating and cooling.
This allows you to handle control systems with different heating and cooling response characteristics.

List of Models

Model
E5ED-RX4A6M-000
E5ED-RX4D6M-000
E5ED-RX4A6M-008
E5ED-RX4D6M-008
E5ED-RX4A6M-010
E5ED-RX4D6M-010
E5ED-QX4A6M-000
E5ED-QX4D6M-000
E5ED-QX4A6M-008
E5ED-QX4D6M-008
E5ED-QX4A6M-010
E5ED-QX4D6M-010

Model
E5ED-CX4A6M-000
E5ED-CX4D6M-000
E5ED-CX4A6M-004
E5ED-CX4D6M-004
E5ED-CX4A6M-022
E5ED-CX4D6M-022
E5ED-RR4A6M-000
E5ED-RR4A6M-008
E5ED-QR4A6M-000
E5ED-QR4A6M-008

Model Number Legend

Models with Push-In Plus Terminal Blocks

E5ED-□□ 4 □ B M -□□□ (Example: E5ED-RX4ABM-000)

① ② ③ ④ ⑤ ⑥

Model	① Control outputs 1 and 2	② No. of auxiliary outputs	③ Power supply voltage	④ Terminal type	⑤ Input type	⑥ Options	Meaning	
E5ED							48 × 96 mm	
							Control output 1	Control output 2
	RX						Relay output	None
	QX						Voltage output (for driving SSR)	None
	CX						Linear current output	None
	QR						Voltage output (for driving SSR)	Relay output
	RR						Relay output	Relay output
		4					4 (auxiliary outputs 1 and 2 with same common and auxiliary outputs 3 and 4 with same common)	
			A				100 to 240 VAC	
			D				24 VAC/DC	
				B			Push-In Plus terminal block	
					M		Universal input	

		HB alarm and HS alarm	Communications	Event inputs	Transfer Output
	000	---	---	---	---
✻1	004	---	RS-485	2	---
✻2	008	1	RS-485	2	---
✻3	010	1	---	4	---
✻1	022	---	RS-485	4	Provided.

✻1. This option can be selected when the control output is CX.
✻2. This option can be selected when the control output is RX, QX, QR, or RR.
✻3. This option can be selected when the control output is RX or QX.

Heating and Cooling Control

Using Heating and Cooling Control

① Control Output Assignment
If there is no control output 2, an auxiliary output is used as the cooling control output.
If there is a control output 2, the two control outputs are used for heating and cooling. (It does not matter which output is used for heating and which output is used for cooling.)
② Control
If PID control is used, you can set PID control separately for heating and cooling.
This allows you to handle control systems with different heating and cooling response characteristics.

List of Models

Model
E5ED-RX4ABM-000
E5ED-RX4DBM-000
E5ED-RX4ABM-008
E5ED-RX4DBM-008
E5ED-RX4ABM-010
E5ED-RX4DBM-010
E5ED-QX4ABM-000
E5ED-QX4DBM-000
E5ED-QX4ABM-008
E5ED-QX4DBM-008
E5ED-QX4ABM-010
E5ED-QX4DBM-010

Model
E5ED-CX4ABM-000
E5ED-CX4DBM-000
E5ED-CX4ABM-004
E5ED-CX4DBM-004
E5ED-CX4ABM-022
E5ED-CX4DBM-022
E5ED-RR4ABM-000
E5ED-RR4ABM-008
E5ED-QR4ABM-000
E5ED-QR4ABM-008

Optional Products (Order Separately)

USB-Serial Conversion Cable

Model
E58-CIFQ2

Communication Conversion Cable

Model
E58-CIFQ2-E

Note: Always use this product together with the E58-CIFQ2.

Terminal Covers

(Cannot be used on a Push-In Plus terminal block type)

Model
E53-COV24 (3pcs)

Note: Terminal Covers are provided with the Digital Temperature Controller.

Waterproof Packing

Model
Y92S-P9

Note: This Waterproof Packing is provided with the Digital Temperature Controller.

Waterproof Cover

Model
Y92A-49N

Front Port Cover

Model
Y92S-P7

Note: This Front Port Cover is provided with the Digital Controller.

Mounting Adapter

Model
Y92F-51 (2pcs)

Note: This Mounting Adapter is provided with the Digital Temperature Controller.

Current Transformers (CTs)

Hole diameter	Model
5.8 mm	E54-CT1
5.8 mm	E54-CT1L✻
12.0 mm	E54-CT3
12.0 mm	E54-CT3L✻

✻Lead wires are included with these CTs. If UL certification is required, use these CTs.

Draw-out Jig

(Cannot be used on a Push-In Plus terminal block type)

Model
Y92F-59

CX-Thermo Support Software

Model
EST2-2C-MV4

Note: CX-Thermo version 4.66 or higher is required for the E5ED. CX-Thermo version 4.67 or higher is required for the E5ED-B. For the system requirements for the CX-Thermo, refer to information on the EST2-2C-MV4 on the OMRON website (www.ia.omron.com).

Specifications

Ratings

Power supply voltage		A in model number: 100 to 240 VAC, 50/60 Hz D in model number: 24 VAC, 50/60 Hz; 24 VDC
Operating voltage range		85% to 110% of rated supply voltage
Power consumption		Models with option selection of 000: 6.6 VA max. at 100 to 240 VAC, and 4.1 VA max. at 24 VAC or 2.3 W max. at 24 VDC All other models: 8.3 VA max. at 100 to 240 VAC, and 5.5 VA max. at 24 VAC or 3.2 W max. at 24 VDC
Sensor input		Temperature input Thermocouple: K, J, T, E, L, U, N, R, S, B, C/W, or PL II Platinum resistance thermometer: Pt100 or JPt100 Infrared temperature sensor (ES1B): 10 to 70°C, 60 to 120°C, 115 to 165°C, or 140 to 260°C Analog input Current input: 4 to 20 mA or 0 to 20 mA Voltage input: 1 to 5 V, 0 to 5 V, or 0 to 10 V
Input impedance		Current input: 150 Ω max., Voltage input: 1 MΩ min. (Use a 1:1 connection when connecting the ES2-HB-N/THB-N.)
Control method		ON/OFF control or 2-PID control (with auto-tuning)
Control output	**Relay output**	SPST-NO, 250 VAC, 5 A (resistive load), electrical life: 100,000 operations, minimum applicable load: 5 V, 10 mA (reference value)
	Voltage output (for driving SSR)	Output voltage: 12 VDC ±20% (PNP), max. load current: 40 mA, with short-circuit protection circuit (The maximum load current is 21 mA for models with two control outputs.)
	Linear current output	4 to 20 or 0 to 20 mA DC, Load: 500 Ω max., Resolution: Approx. 10,000
Auxiliary output	**Number of outputs**	4
	Output specifications	SPST-NO relay outputs, 250 VAC, 2 A (resistive load) Electrical life: 100,000 operations, Minimum applicable load: 10 mA at 5 V (reference values)
Event input	**Number of inputs**	2 or 4 (depends on model)
	External contact input specifications	Contact input: ON: 1 kΩ max., OFF: 100 kΩ min.
		Non-contact input: ON: Residual voltage: 1.5 V max., OFF: Leakage current: 0.1 mA max.
		Current flow: Approx. 7 mA per contact
Transfer Output	**Number of outputs**	1 (depends on model): Transfer output type
	Output specifications	Current output: 4 to 20 mA DC, Load: 500 Ω, Resolution: Approx. 10,000 Linear voltage output: 1 to 5 V DC, Load: 1 kΩ min., Resolution: Approx. 10,000
Setting method		Digital setting using front panel keys
Indication method		11-segment digital display, individual indicators, and bar display Character height: PV: 18.0 mm, SV: 11.0 mm, MV: 7.8 mm Three displays Contents: PV/SV/MV, PV/SV/Multi-SP, PV/SV/Remaining soak time, etc. Numbers of digits: 4 digits each for PV, SV, and MV displays
Multi SP		Up to eight set points (SP0 to SP7) can be saved and selected using the event inputs, key operations, or serial communications.
Bank switching		None
Other functions		Adaptive control, automatic filter adjustment, water-cooling output adjustment, indication data (power ON time monitor, ambient temperature monitor, and control output ON/OFF count monitors), parameter masking, operation after power ON, manual output, heating/cooling control, loop burnout alarm, SP ramp, other alarm functions, heater burnout (HB) alarm (including SSR failure (HS) alarm), 40% AT, 100% AT, MV limiter, input digital filter, robust tuning, PV input shift, run/stop, protection functions, extraction of square root, MV change rate limit, logic operations, temperature status display, simple programming, moving average of input value, and display brightness setting
Ambient operating temperature		−10 to 55°C (with no condensation or icing), For 3-year warranty: −10 to 50°C with standard mounting (with no condensation or icing)
Ambient operating humidity		25% to 85%
Storage temperature		−25 to 65°C (with no condensation or icing)
Altitude		2,000 m max.
Recommended fuse		T2A, 250 VAC, time-lag, low-breaking capacity
Installation environment		Overvoltage category II, Pollution Degree 2 (EN/IEC/UL 61010-1)

Input Ranges

Thermocouple/Platinum Resistance Thermometer (Universal inputs)

Sensor type	Platinum resistance thermometer					Thermocouple																Infrared temperature sensor			
Sensor specification	Pt100			JPt100		K		J		T		E	L	U		N	R	S	B	C/W	PLII	10 to 70°C	60 to 120°C	115 to 165°C	140 to 260°C
Temperature range (°C)	850	500.0	100.0	500.0	100.0	1300	500.0	850	400.0	400	400.0	600	850	400	400.0	1300	1700	1700	1800	2300	1300	90	120	165	260
			0.0		0.0		−20.0	−100	−20.0				−100				0	0	0	0	0	0	0	0	0
	−200	−199.9		−199.9		−200				−200	−199.9	−200		−200	−199.9	−200									
Set value	0	1	2	3	4	5	6	7	8	9	10	11	12	13	14	15	16	17	18	19	20	21	22	23	24

Shaded settings are the default settings.

The applicable standards for the input types are as follows:

K, J, T, E, N, R, S, B: JIS C 1602-2015, IEC 60584-1
L: Fe-CuNi, DIN 43710-1985
U: Cu-CuNi, DIN 43710-1985
C/W: W5Re/W26Re, JIS C1602-2015, ASTM E988-1990
JPt100: JIS C 1604-1989, JIS C 1606-1989
Pt100: JIS C 1604-1997, IEC 60751
PL II: According to Platinel II electromotive force charts from BASF (previously Engelhard)

Analog input

Input type	Current		Voltage		
Input specification	4 to 20 mA	0 to 20 mA	1 to 5 V	0 to 5 V	0 to 10 V
Setting range	Usable in the following ranges by scaling: -1999 to 9999, -199.9 to 999.9, -19.99 to 99.99 or -1.999 to 9.999				
Set value	25	26	27	28	29

Alarm Types

Each alarm can be independently set to one of the following 17 alarm types. The default is 2: Upper limit. (see note.)
Auxiliary outputs are allocated for alarms. ON delays and OFF delays (0 to 999 s) can also be specified.

Note: In the default settings for models with HB or HS alarms, alarm 1 is set to a heater alarm (HA) and the Alarm Type 1 parameter is not displayed. To use alarm 1, set the output assignment to alarm 1.

Set value	Alarm type	Alarm output operation		Description of function
		When alarm value X is positive	When alarm value X is negative	
0	Alarm function OFF	Output OFF		No alarm
1	Upper- and lower-limit ✻1		✻2	Set the upward deviation in the set point for the alarm upper limit (H) and the lower deviation in the set point for the alarm lower limit (L). The alarm is ON when the PV is outside this deviation range.
2 (default)	Upper-limit	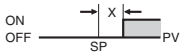		Set the upward deviation in the set point by setting the alarm value (X). The alarm is ON when the PV is higher than the SP by the deviation or more.
3	Lower-limit		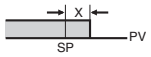	Set the downward deviation in the set point by setting the alarm value (X). The alarm is ON when the PV is lower than the SP by the deviation or more.
4	Upper- and lower-limit range ✻1	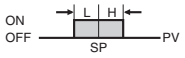	✻3	Set the upward deviation in the set point for the alarm upper limit (H) and the lower deviation in the set point for the alarm lower limit (L). The alarm is ON when the PV is inside this deviation range.
5	Upper- and lower-limit with standby sequence ✻1	✻5	✻4	A standby sequence is added to the upper- and lower-limit alarm (1). ✻6
6	Upper-limit with standby sequence	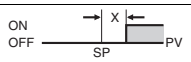		A standby sequence is added to the upper-limit alarm (2). ✻6
7	Lower-limit with standby sequence		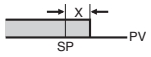	A standby sequence is added to the lower-limit alarm (3). ✻6
8	Absolute-value upper-limit	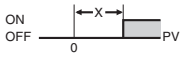	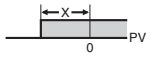	The alarm will turn ON if the process value is larger than the alarm value (X) regardless of the set point.
9	Absolute-value lower-limit	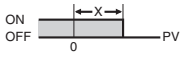	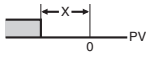	The alarm will turn ON if the process value is smaller than the alarm value (X) regardless of the set point.
10	Absolute-value upper-limit with standby sequence	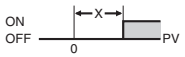	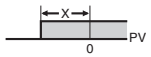	A standby sequence is added to the absolute-value upper-limit alarm (8). ✻6
11	Absolute-value lower-limit with standby sequence	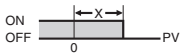	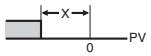	A standby sequence is added to the absolute-value lower-limit alarm (9). ✻6
12	LBA (alarm 1 type only)	-		✻7
13	PV change rate alarm	-		✻8
14	SP absolute-value upper-limit alarm	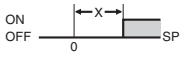	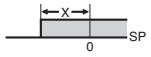	This alarm type turns ON the alarm when the set point (SP) is higher than the alarm value (X).
15	SP absolute-value lower-limit alarm	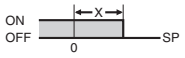	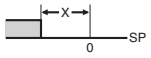	This alarm type turns ON the alarm when the set point (SP) is lower than the alarm value (X).
16	MV absolute-value upper-limit alarm ✻9	Standard Control 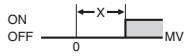 Heating/Cooling Control (Heating MV) 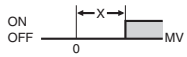	Standard Control 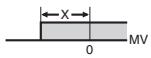 Heating/Cooling Control (Heating MV) Always ON	This alarm type turns ON the alarm when the manipulated variable (MV) is higher than the alarm value (X).
17	MV absolute-value lower-limit alarm ✻9	Standard Control 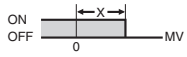 Heating/Cooling Control (Cooling MV) 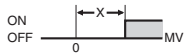	Standard Control 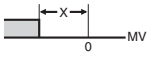 Heating/Cooling Control (Cooling MV) Always ON	This alarm type turns ON the alarm when the manipulated variable (MV) is lower than the alarm value (X).

✻1. With set values 1, 4 and 5, the upper and lower limit values can be set independently for each alarm type, and are expressed as “L” and “H.”

✻2. Set value: 1, Upper- and lower-limit alarm

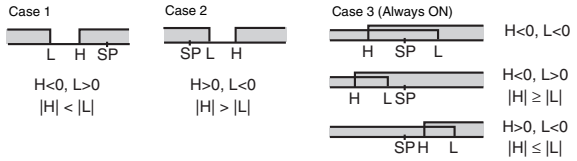

✻3. Set value: 4, Upper- and lower-limit range

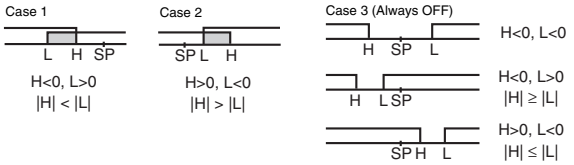

✻4. Set value: 5, Upper- and lower-limit with standby sequence

For Upper- and Lower-Limit Alarm Described Above *2

- Case 1 and 2

Always OFF when the upper-limit and lower-limit hysteresis overlaps.

- Case 3: Always OFF

✻5. Set value: 5, Upper- and lower-limit with standby sequence

Always OFF when the upper-limit and lower-limit hysteresis overlaps.

✻6. Refer to the *E5□D Digital Temperature Controllers User's Manual* (Cat. No. H224) for information on the operation of the standby sequence.

✻7. Refer to the *E5□D Digital Temperature Controllers User's Manual* (Cat. No.H224) for information on the loop burnout alarm (LBA).

✻8. Refer to the *E5□D Digital Temperature Controllers User's Manual* (Cat. No. H224) for information on the PV change rate alarm.

✻9. When heating/cooling control is performed, the MV absolute upper limit alarm functions only for the heating operation and the MV absolute lower limit alarm functions only for the cooling operation.

Characteristics

Indication accuracy (at the ambient temperature of 23°C)		Thermocouple: (±0.3% of indication value or ±1°C, whichever is greater) ±1 digit max. ✻1 Platinum resistance thermometer: (±0.2% of indication value or ±0.8°C, whichever is greater) ±1 digit max. Analog input: ±0.2% FS ±1 digit max. CT input: ±5% FS ±1 digit max.
Transfer output accuracy		±0.3% FS max.
Influence of temperature ✻2		Thermocouple input (R, S, B, C/W, PL II): (±1% of indication value or ±10°C, whichever is greater) ±1 digit max. Other thermocouple input: (±1% of indication value or ±4°C, whichever is greater) ±1 digit max. ✻3 Platinum resistance thermometer: (±1% of indication value or ±2°C, whichever is greater) ±1 digit max. Analog input: ±1%FS ±1 digit max. CT input: ±5% FS ±1 digit max.
Influence of voltage ✻2		
Influence of EMS. (at EN 61326-1)		
Input sampling period		50 ms
Hysteresis		Temperature input: 0.1 to 999.9°C or °F (in units of 0.1°C or °F) Analog input: 0.01% to 99.99% FS (in units of 0.01% FS)
Proportional band (P)		Temperature input: 0.1 to 999.9°C or °F (in units of 0.1°C or °F) Analog input: 0.1% to 999.9% FS (in units of 0.1% FS)
Integral time (I)		0 to 9999 s (in units of 1 s), 0.0 to 999.9 s (in units of 0.1 s) ✻4
Derivative time (D)		0 to 9999 s (in units of 1 s), 0.0 to 999.9 s (in units of 0.1 s) ✻4
Proportional band (P) for cooling		Temperature input: 0.1 to 999.9°C or °F (in units of 0.1°C or °F) Analog input: 0.1% to 999.9% FS (in units of 0.1% FS)
Integral time (I) for cooling		0 to 9999 s (in units of 1 s), 0.0 to 999.9 s (in units of 0.1 s) ✻4
Derivative time (D) for cooling		0 to 9999 s (in units of 1 s), 0.0 to 999.9 s (in units of 0.1 s) ✻4
For adaptive control	**SP response proportional band**	Temperature input: 0.1 to 999.9°C or °F (in units of 0.1°C or °F)
	SP response integral time	0 to 9999 s (in units of 1 s), 0.0 to 999.9 s (in units of 0.1 s) ✻4
	SP response derivative time	0 to 9999 s (in units of 1 s), 0.0 to 999.9 s (in units of 0.1 s) ✻4
	Disturbance proportional band	Temperature input: 0.1 to 999.9°C or °F (in units of 0.1°C or °F)
	Disturbance integral time	0 to 9999 s (in units of 1 s), 0.0 to 999.9 s (in units of 0.1 s)✻4
	Disturbance derivative time	0 to 9999 s (in units of 1 s), 0.0 to 999.9 s (in units of 0.1 s) ✻4
Control period		0.1, 0.2, 0.5, 1 to 99 s (in units of 1 s)
Manual reset value		0.0 to 100.0% (in units of 0.1%)
Alarm setting range		−1999 to 9999 (decimal point position depends on input type)
Influence of signal source resistance		Thermocouple: 0.1°C/Ω max. (100 Ω max.) Platinum resistance thermometer: 0.1°C/Ω max. (10 Ω max.)
Insulation resistance		20 MΩ min. (at 500 VDC)
Dielectric strength		3,000 VAC, 50/60 Hz for 1 min between terminals of different charge
Vibration	**Malfunction**	10 to 55 Hz, 20 m/s^2 for 10 min each in X, Y, and Z directions
	Resistance	10 to 55 Hz, 20 m/s^2 for 2 hrs each in X, Y, and Z directions
Shock	**Malfunction**	100 m/s^2, 3 times each in X, Y, and Z directions
	Resistance	300 m/s^2, 3 times each in X, Y, and Z directions
Weight		Controller: Approx. 210 g, Mounting Adapter: Approx. 4 g × 2
Degree of protection		Front panel: IP66, Rear case: IP20, Terminals: IP00
Memory protection		Non-volatile memory (number of writes: 1,000,000 times)
Setup Tool		E5ED: CX-Thermo version 4.66 or higher E5ED-B: CX-Thermo version 4.67 or higher
Setup Tool port		E5ED/E5ED-B top panel: An E58-CIFQ2 USB-Serial Conversion Cable is used to connect a USB port on the computer.✻5 E5ED/E5ED-B front panel: An E58-CIFQ2 USB-Serial Conversion Cable and E58-CIFQ2-E Conversion Cable are used together to connect a USB port on the computer. ✻5
Standards	**Approved standards**	cULus: UL 61010-1/CSA C22.2 No.61010-1, Korean wireless regulations (Radio law: KC Mark)
	Conformed standards	EN 61010-1 (IEC 61010-1) and RCM standards

✻1. The indication accuracy of K thermocouples in the −200 to 1,300°C range, T and N thermocouples at a temperature of −100°C max., and U and L thermocouples at any temperatures is ±2°C ±1 digit max. The indication accuracy of the B thermocouple at a temperature of 400°C max. is not specified. The indication accuracy of B thermocouples at a temperature of 400 to 800°C is ±3°C max. The indication accuracy of the R and S thermocouples at a temperature of 200°C max. is ±3°C ±1 digit max. The indication accuracy of C/W thermocouples is (±0.3% of PV or ±3°C, whichever is greater) ±1 digit max. The indication accuracy of PL II thermocouples is (±0.3% of PV or ±2°C, whichever is greater) ±1 digit max.
✻2. Ambient temperature: −10°C to 23°C to 55°C, Voltage range: −15% to 10% of rated voltage
✻3. K thermocouple at −100°C max.: ±10°C max.
✻4. The unit is determined by the setting of the Integral/Derivative Time Unit parameter.
✻5. External communications (RS-485) and USB-serial conversion cable communications can be used at the same time.

EMC	EMI:	EN 61326-1 ✻6
	Radiated Interference Electromagnetic Field Strength:	EN 55011 Group 1, class A
	Noise Terminal Voltage:	EN 55011 Group 1, class A
	EMS:	EN 61326-1 ✻6
	ESD Immunity:	EN 61000-4-2
	Electromagnetic Field Immunity:	EN 61000-4-3
	Burst Noise Immunity:	EN 61000-4-4
	Conducted Disturbance Immunity:	EN 61000-4-6
	Surge Immunity:	EN 61000-4-5
	Voltage Dip/Interrupting Immunity:	EN 61000-4-11

✻6. Industrial electromagnetic environment (EN/IEC 61326-1 Table 2)

USB-Serial Conversion Cable

Applicable OS	Windows XP/Vista/7/8/10 ✻1
Applicable software	CX-Thermo version 4.66 or higher (E5ED-B: version 4.67 or higher)
Applicable models	E5□C-T Series, E5□C Series, E5CB Series, and E5□D Series
USB interface standard	Conforms to USB Specification 2.0.
DTE speed	38,400 bps
Connector specifications	Computer: USB (type A plug) Digital Temperature Controller: Special serial connector
Power supply	Bus power (Supplied from USB host controller.)✻2
Power supply voltage	5 VDC
Current consumption	450 mA max.
Output voltage	4.7±0.2 VDC (Supplied from USB-Serial Conversion Cable to the Digital Temperature Controller.)
Output current	250 mA max. (Supplied from USB-Serial Conversion Cable to the Digital Temperature Controller.)
Ambient operating temperature	0 to 55°C (with no condensation or icing)
Ambient operating humidity	10% to 80%
Storage temperature	–20 to 60°C (with no condensation or icing)
Storage humidity	10% to 80%
Altitude	2,000 m max.
Weight	Approx. 120 g

Windows is a registered trademark of Microsoft Corporation in the United States and or other countries.

✻**1.** CX-Thermo version 4.65 or higher runs on Windows 10.

✻**2.** Use a high-power port for the USB port.

Note: A driver must be installed on the computer. Refer to the *Instruction Manual* included with the Cable for the installation procedure.

Communications Specifications

Transmission line connection method	RS-485: Multidrop
Communications	RS-485 (two-wire, half duplex)
Synchronization method	Start-stop synchronization
Protocol	CompoWay/F, or Modbus
Baud rate ✻	9,600, 19,200, 38,400, 57,600, or 115,200 bps
Transmission code	ASCII
Data bit length ✻	7 or 8 bits
Stop bit length ✻	1 or 2 bits
Error detection	Vertical parity (none, even, odd) Block check character (BCC) with CompoWay/F or CRC-16 Modbus
Flow control	None
Interface	RS-485
Retry function	None
Communications buffer	217 bytes
Communications response wait time	0 to 99 ms Default: 20 ms

✻ The baud rate, data bit length, stop bit length, and vertical parity can be individually set using the Communications Setting Level.

Communications Functions

Programless communications	You can use the memory in the PLC to read and write E5ED/E5ED-B parameters, start and stop operation, etc. The E5ED/E5ED-B automatically performs communications with PLCs. No communications programming is required. Number of connected Digital Temperature Controllers: 32 max. (Up to 16 for the FX3) Applicable PLCs OMRON PLCs: CS Series, CJ Series, CP Series, NJ Series, or NX1P Mitsubishi Electric PLCs: MELSEC Q Series, L Series, FX3 Series, or iQ-R Series KEYENCE PLCs: KEYENCE KV Series
Copying ✻	When Digital Temperature Controllers are connected, the parameters can be copied from the Digital Temperature Controller that is set as the master to the Digital Temperature Controllers that are set as slaves.

MELSEC is a registered trademark of Mitsubishi Electric Corporation.
KEYENCE is a registered trademark of Keyence Corporation.

✻Programless communications supports the copying function.

Current Transformer (Order Separately) Ratings

	E54-CT1 E54-CT3	E54-CT1L E54-CT3L
Dielectric strength	1,000 VAC for 1 min	1,500 VAC for 1 min
Vibration resistance	50 Hz, 98 m/s^2	
Weight	E54-CT1: Approx. 11.5 g E54-CT3: Approx. 50 g	E54-CT1L: Approx. 14 g E54-CT3L: Approx. 57 g
Accessories	E54-CT3 Only Armatures (2) Plugs (2)	None

Heater Burnout Alarms and SSR Failure Alarms

CT input (for heater current detection)	Models with detection for single-phase heaters: One input
Maximum heater current	50 A AC
Input current indication accuracy	±5% FS ±1 digit max.
Heater burnout alarm setting range ✻1	0.1 to 49.9 A (in units of 0.1 A) Minimum detection ON time: 100 ms ✻3
SSR failure alarm setting range ✻2	0.1 to 49.9 A (in units of 0.1 A) Minimum detection OFF time: 100 ms ✻4

✻**1.** For heater burnout alarms, the heater current will be measured when the control output is ON, and the output will turn ON if the heater current is lower than the set value (i.e., heater burnout detection current value).

✻**2.** For SSR failure alarms, the heater current will be measured when the control output is OFF, and the output will turn ON if the heater current is higher than the set value (i.e., SSR failure detection current value).

✻**3.** The value is 30 ms for a control period of 0.1 s or 0.2 s.

✻**4.** The value is 38 ms for a control period of 0.1 s or 0.2 s.

Electrical Life Expectancy Curve for Control Output Relay (Reference Values)

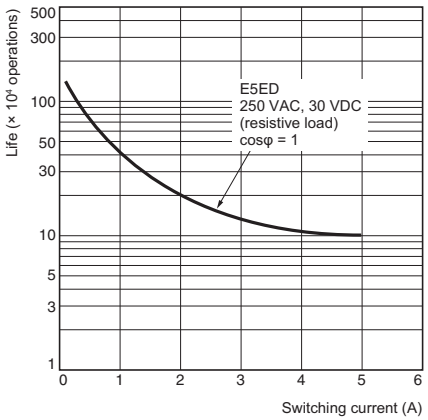

External Connections

E5ED (Screw Terminal Blocks)

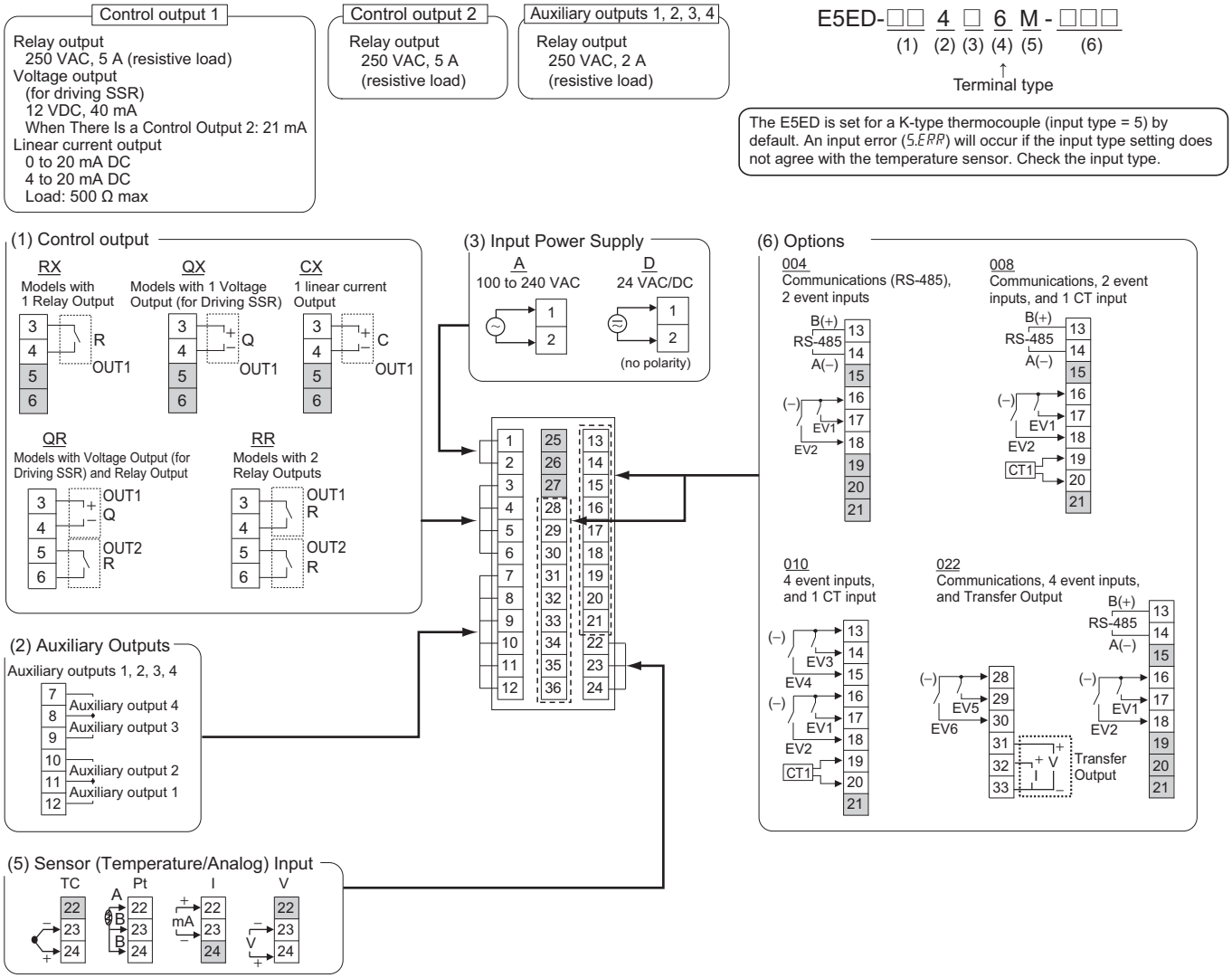

Note: 1. The application of the terminals depends on the model.
2. Do not wire the terminals that are shown with a gray background.
3. When complying with EMC standards, the cable that connects the sensor must be 30 m or less.
If the cable length exceeds 30 m, compliance with EMC standards will not be possible.
4. Connect M3 crimped terminals.
5. Due to UL Listing requirements, use the E54-CT1L or E54-CT3L Current Transformer with the factory wiring (internal wiring).
Use a UL category XOBA or XOBA7 current transformer that is UL Listed for field wiring (external wiring) and not the factory wiring (internal wiring).

E5ED-B (Push-In Plus Terminal Blocks)

Control output 1
Relay output
250 VAC, 5 A (resistive load)
Voltage output
(for driving SSR)
12 VDC, 40 mA
When There Is a Control Output 2: 21 mA
Linear current output
0 to 20 mA DC
4 to 20 mA DC
Load: 500 Ω max

Control output 2
Relay output
250 VAC, 5 A
(resistive load)

Auxiliary outputs 1, 2, 3, 4
Relay output
Models with 4 auxiliary outputs
250 VAC, 2 A (resistive load)

E5ED-□□ □□ B M - □□□
(1) (2) (3) (4) (5) (6)
↑
Terminal type

The E5ED-B is set for a K-type thermocouple (input type = 5) by default. An input error (5.ERR) will occur if the input type setting does not agree with the temperature sensor. Check the input type.

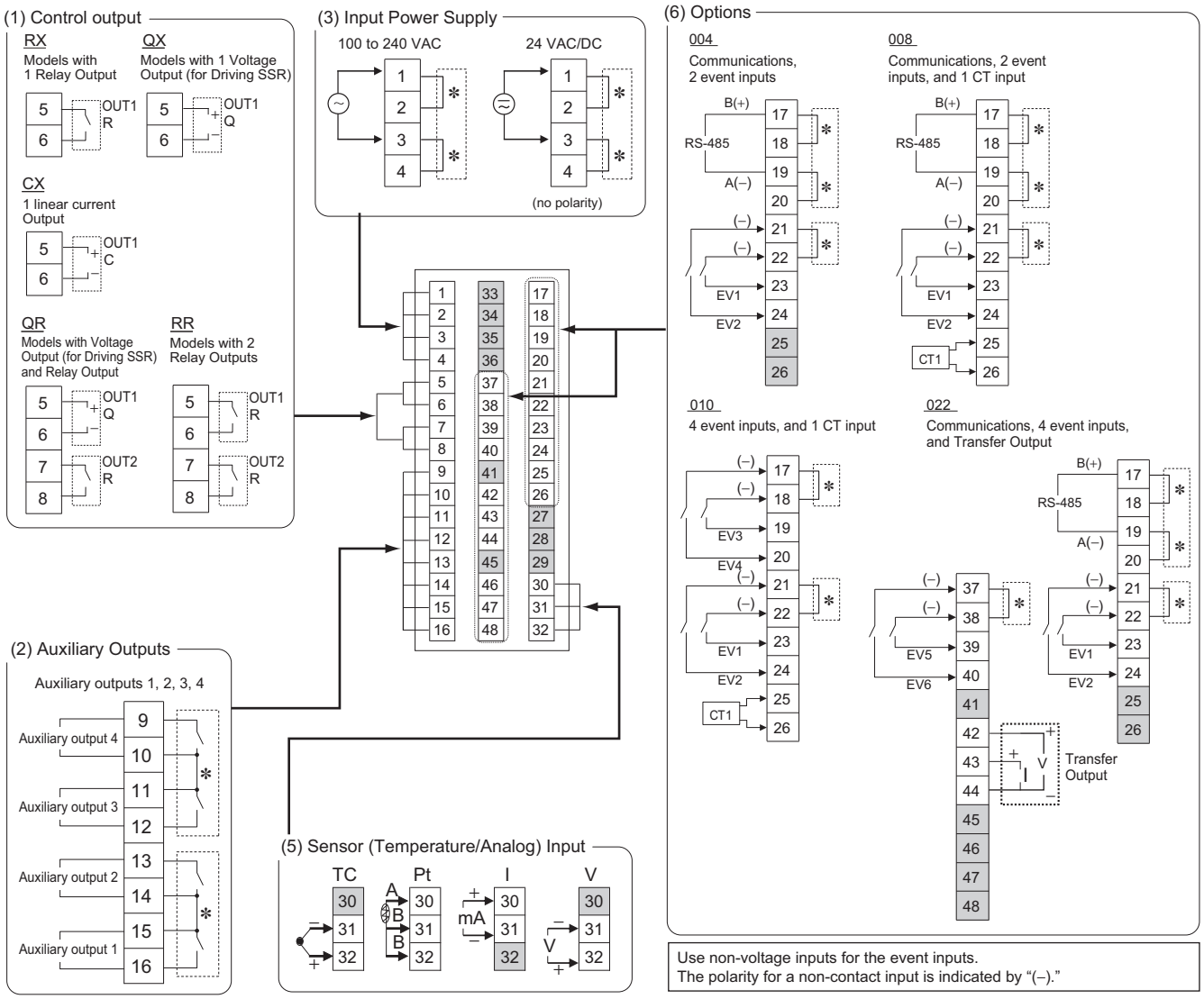

Use non-voltage inputs for the event inputs.
The polarity for a non-contact input is indicated by "(–)."

Note: 1. The application of the terminals depends on the model.
2. Do not wire the terminals that are shown with a gray background.
3. When complying with EMC standards, the cable that connects the sensor must be 30 m or less.
If the cable length exceeds 30 m, compliance with EMC standards will not be possible.
4. Refer to *E5□D-B (Push-In Plus terminal block types)* on page 48 for wire specifications and wiring methods.
5. Common terminals are indicated with asterisks (*).
You can use the input power supply and communications common terminals for crossover wiring.
Controllers given below if you use crossover wiring for the input power supply.
100 to 240 VAC Controllers: 16 max.
24 VAC/VDC Controllers: 8 max.

Wiring Example:

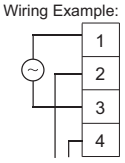

To another E5ED-B

6. Due to UL Listing requirements, use the E54-CT1L or E54-CT3L Current Transformer with the factory wiring (internal wiring).
Use a UL category XOBA or XOBA7 current transformer that is UL Listed for field wiring (external wiring) and not the factory wiring (internal wiring).

Isolation/Insulation Block Diagrams

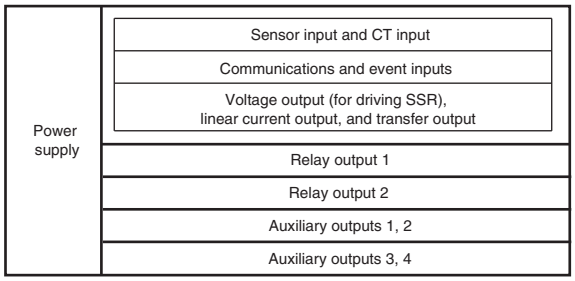

: Reinforced insulation

: Functional isolation

Note: Auxiliary outputs 1 and 2 and auxiliary outputs 3 and 4 are not insulated.

Nomenclature

E5ED/E5ED-B

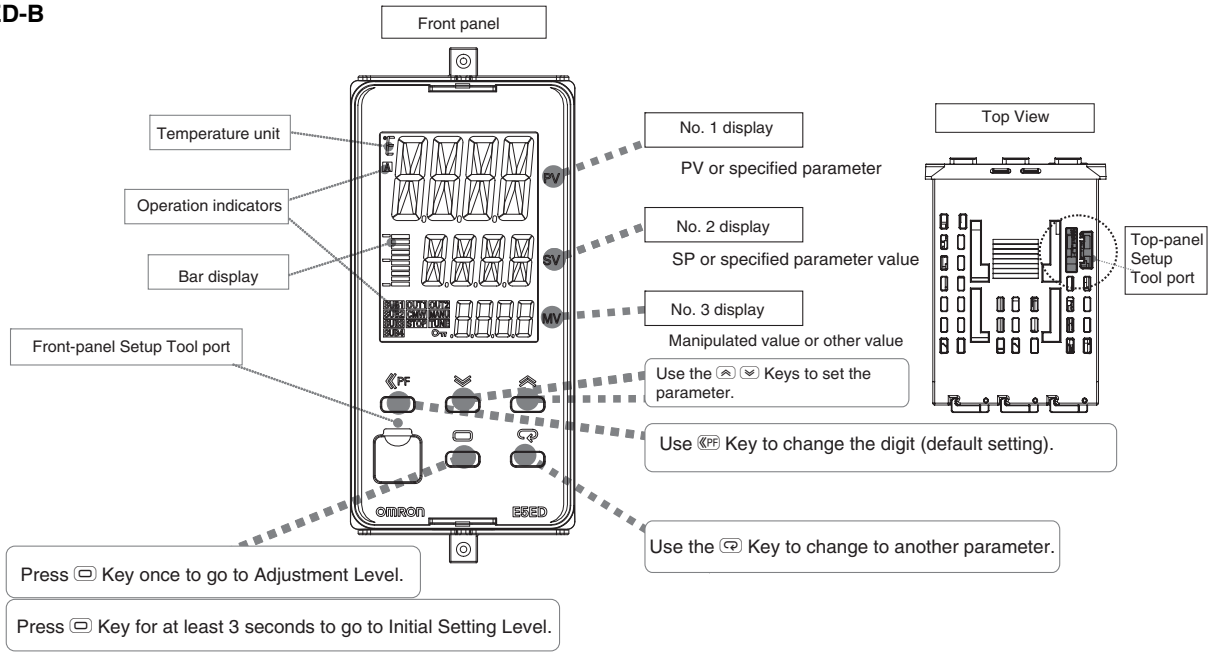

Dimensions

(Unit: mm)

Controllers

E5ED

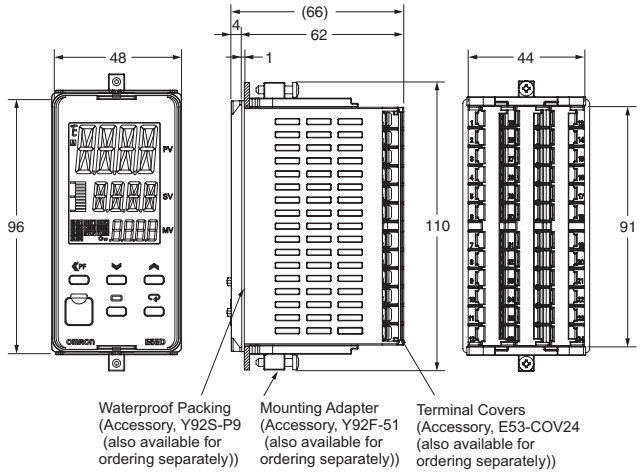

E5ED-B

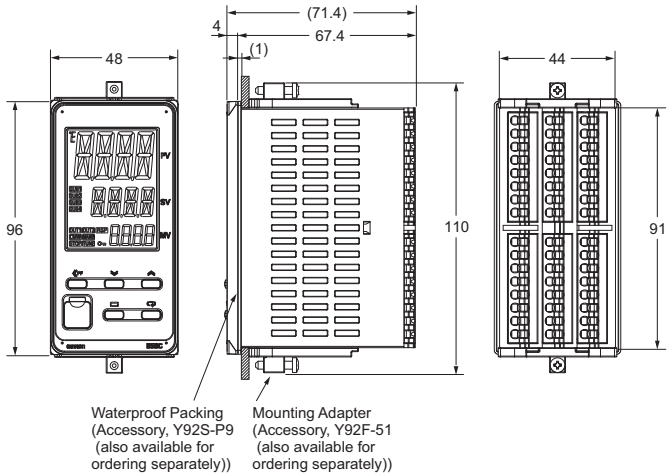

- Setup Tool ports are provided as standard feature. Use these ports to connect a computer to the Digital Temperature Controller. The E58-CIFQ2 USB-Serial Conversion Cable is required to connect to the port on the top panel. The E58-CIFQ2 USB-Serial Conversion Cable and E58-CIFQ2-E Communications Conversion Cable are required to connect to the port on the front panel. (You cannot leave either port connected constantly during operation.)

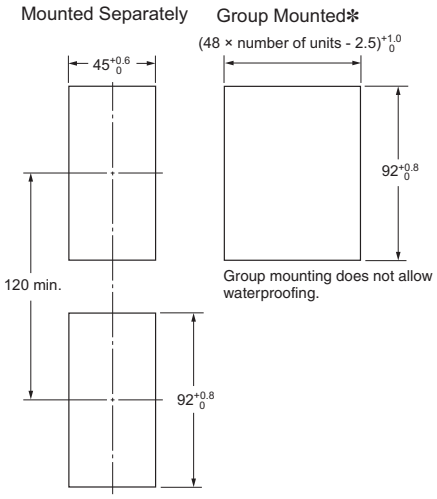

- Recommended panel thickness is 1 to 8 mm.
- Group mounting is not possible in the vertical direction. (Maintain the specified mounting space between Controllers.)
- To mount the Controller so that it is waterproof, insert the waterproof packing onto the Controller.
- When two or more Controllers are mounted, make sure that the surrounding temperature does not exceed the allowable operating temperature specified in the specifications.
- Use a control panel thickness of 1 to 3 mm if the Y92A-49N and a USB-Serial Conversion Cable are used together.

✻ Selections for Control Outputs 1 and 2: QR or RR
If you also specify 022 for the option selection and use group mounting, the ambient temperature must be 45°C or less. Maintain the following spacing when more than one Digital Controller is installed at an ambient temperature of 55°C.

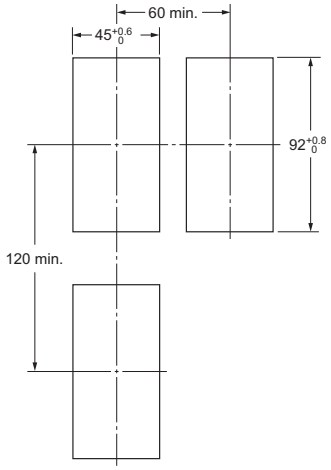

Accessories (Order Separately)

USB-Serial Conversion Cable

E58-CIFQ2

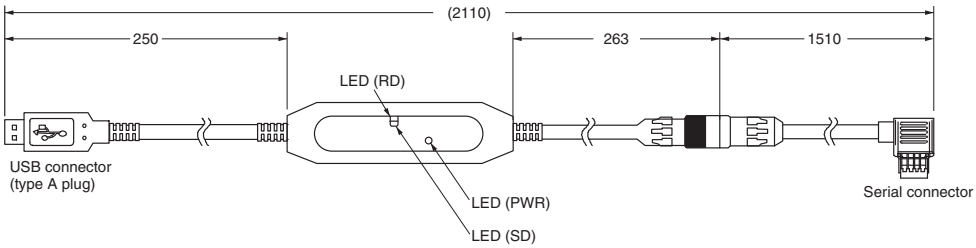

Conversion Cable

E58-CIFQ2-E

Conversion Cable

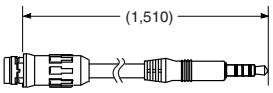

Connected to the E58-CIFQ2 USB-Serial Conversion Cable

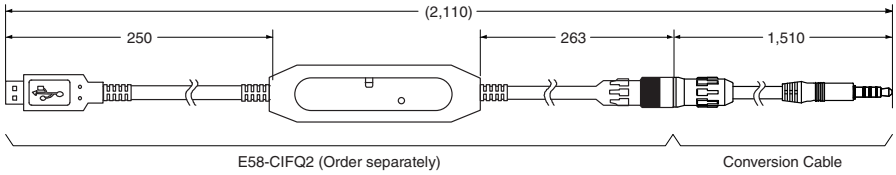

Note: Always use this product together with the E58-CIFQ2.

Terminal Covers (Cannot be used on a Push-In Plus terminal block type)

E53-COV24 (Three Covers provided.)

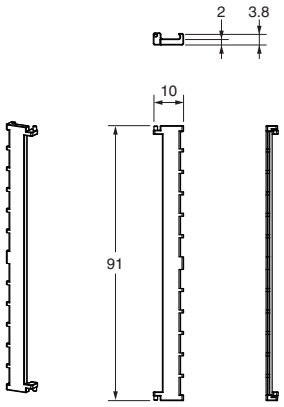

The Terminal Covers are provided with the Digital Temperature Controller. Order the Terminal Cover separately if it becomes lost or damaged.

Waterproof Packing

Y92S-P9 (for DIN 48 × 96)

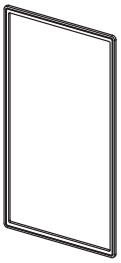

The Waterproof Packing is provided with the Digital Temperature Controller. Order the Waterproof Packing separately if it becomes lost or damaged. The Waterproof Packing can be used to achieve an IP66 degree of protection. Also, keep the Port Cover on the front-panel Setup Tool port of the E5ED/E5ED-B securely closed.
(Deterioration, shrinking, or hardening of the waterproof packing may occur depending on the operating environment. Therefore, periodic replacement is recommended to ensure the level of waterproofing specified in IP66. The time for periodic replacement depends on the operating environment. Be sure to confirm this point at your site. Consider three years as a rough standard.)

Setup Tool Port Cover for front panel

Y92S-P7

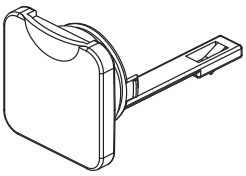

Order this Port Cover separately if the Port Cover on the front-panel Setup Tool port is lost or damaged. The Waterproof Packing must be periodically replaced because it may deteriorate, shrink, or harden depending on the operating environment.

Mounting Adapter

Y92F-51 (Two Adapters provided.)

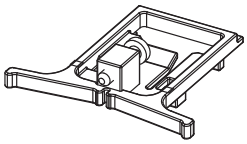

One pair is provided with the Controller. Order this Adapter separately if it becomes lost or damaged.

Waterproof Cover

Y92A-49N (for DIN 48 × 96)

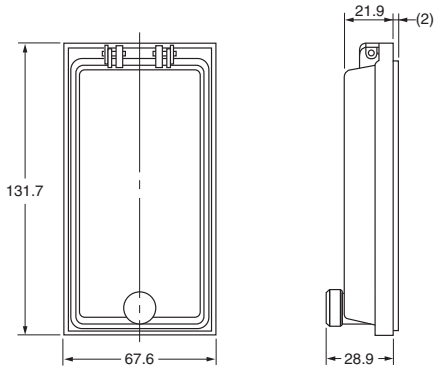

Draw-out Jig (Cannot be used on a Push-In Plus terminal block type)

Y92F-59

Use this Draw-out Jig to remove the interior body of the Digital Temperature Controller from the case to perform maintenance without removing the terminal wiring.

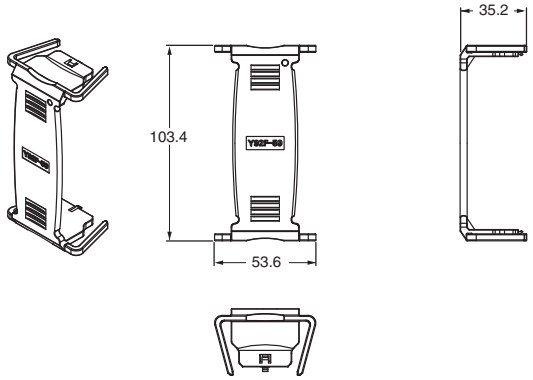

Current Transformers

E54-CT1

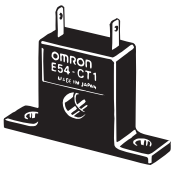

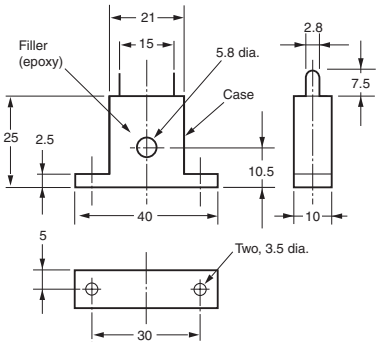

E54-CT1L

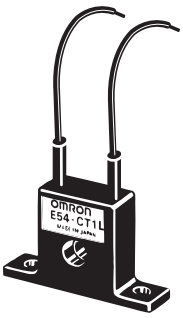

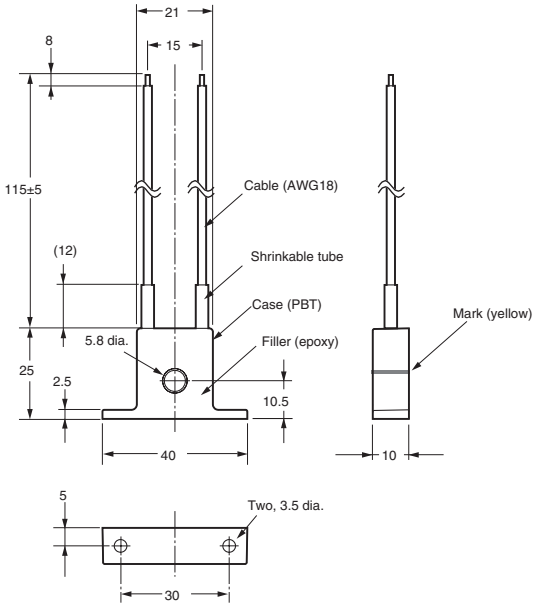

Thru-current (Io) vs. Output Voltage (Eo) (Reference Values) E54-CT1 or E54-CT1L

Maximum continuous heater current: 50 A (50/60 Hz)
Number of windings: 400±2
Winding resistance: 18±2 Ω

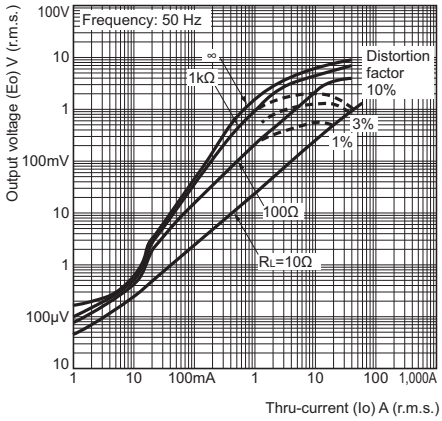

E54-CT3

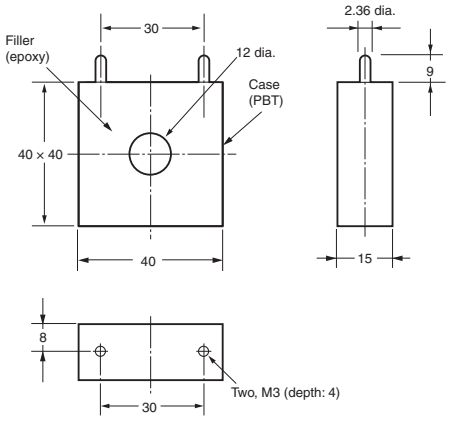

E54-CT3 Accessories

- **Armature**

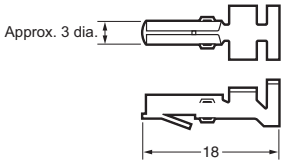

- **Plug**

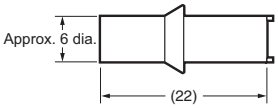

Connection Example

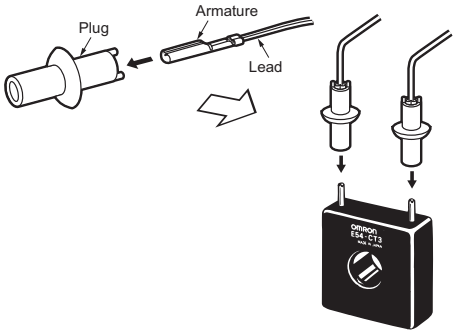

Thru-current (Io) vs. Output Voltage (Eo) (Reference Values) E54-CT3 or E54-CT3L

Maximum continuous heater current: 120 A (50/60 Hz)
(Maximum continuous heater current for an OMRON Digital Temperature Controller is 50 A.)

Number of windings: 400±2

Winding resistance: 8±0.8 Ω

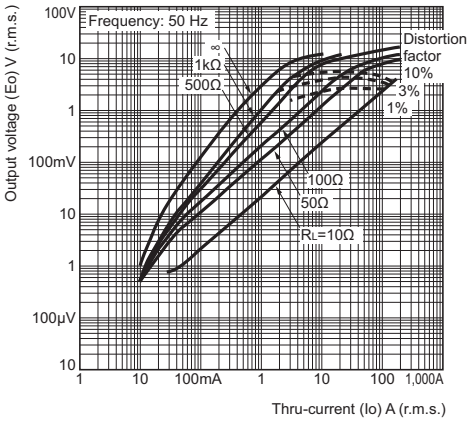

E54-CT3L

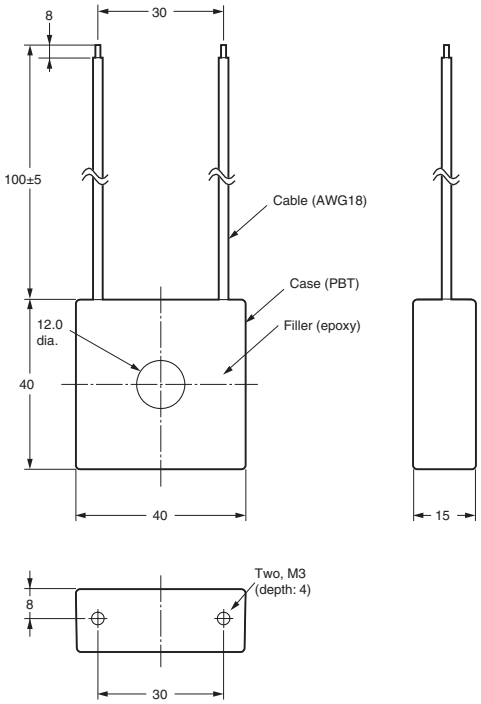

Operation

Setting Levels Diagram

This diagram shows all of the setting levels. To move to the advanced function setting level and calibration level, you must enter passwords. Some parameters are not displayed depending on the protect level setting and the conditions of use.
Control stops when you move from the operation level to the initial setting level.

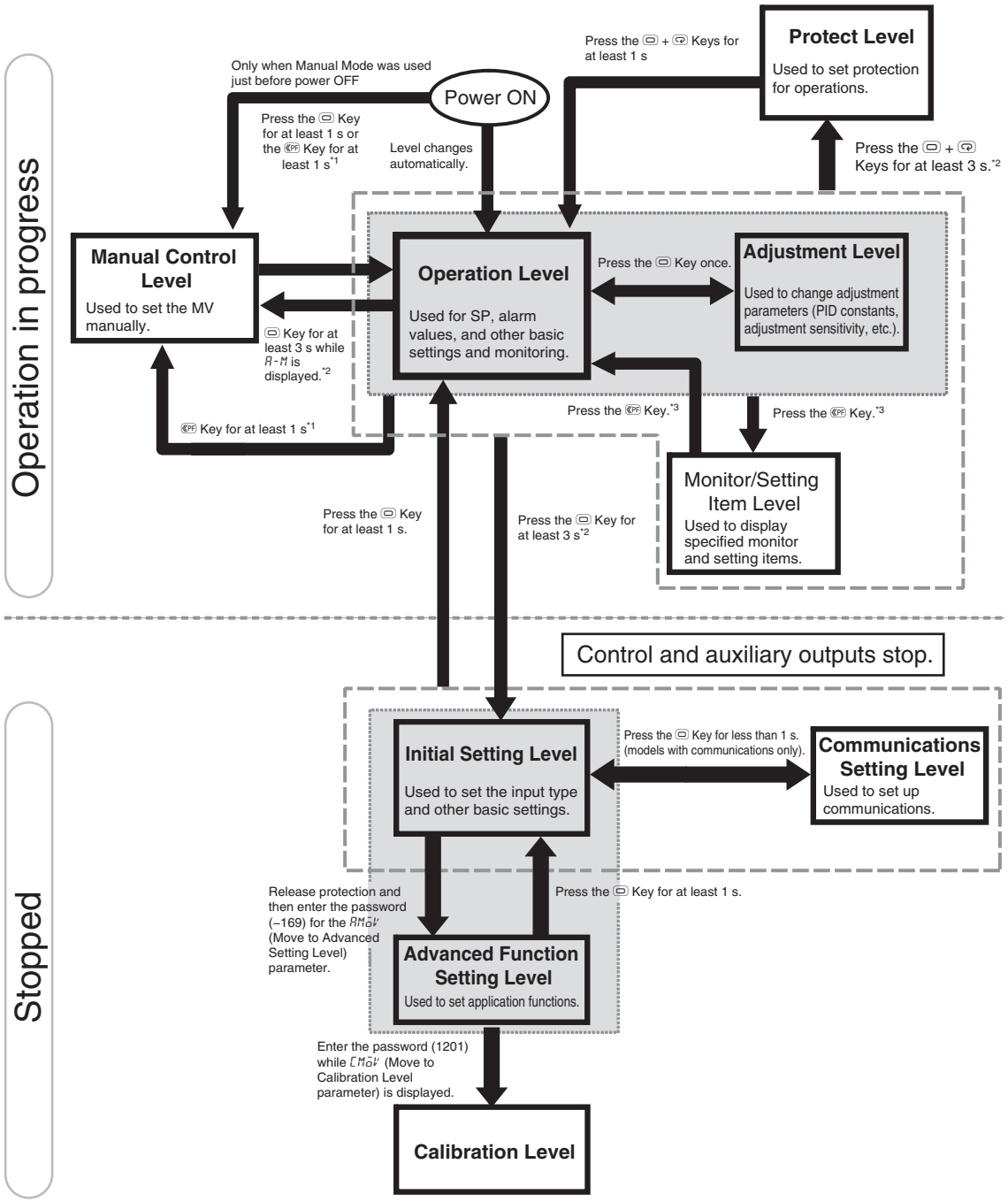

***1.** Set the PF Setting parameter to A-M (Auto/Manual).
***2.** The No. 1 display will flash when the keys are pressed for 1 s or longer.
***3.** Set the PF Setting parameter to PFdP (monitor/setting items).

Operation

Parameter Flow

This section describes the parameters set in each level. Pressing the (Mode) Key at the last parameter in each level returns to the top parameter in that level. Hold down the Key to move through the parameters in reverse. Some parameters may not be displayed depending on the model and other settings.

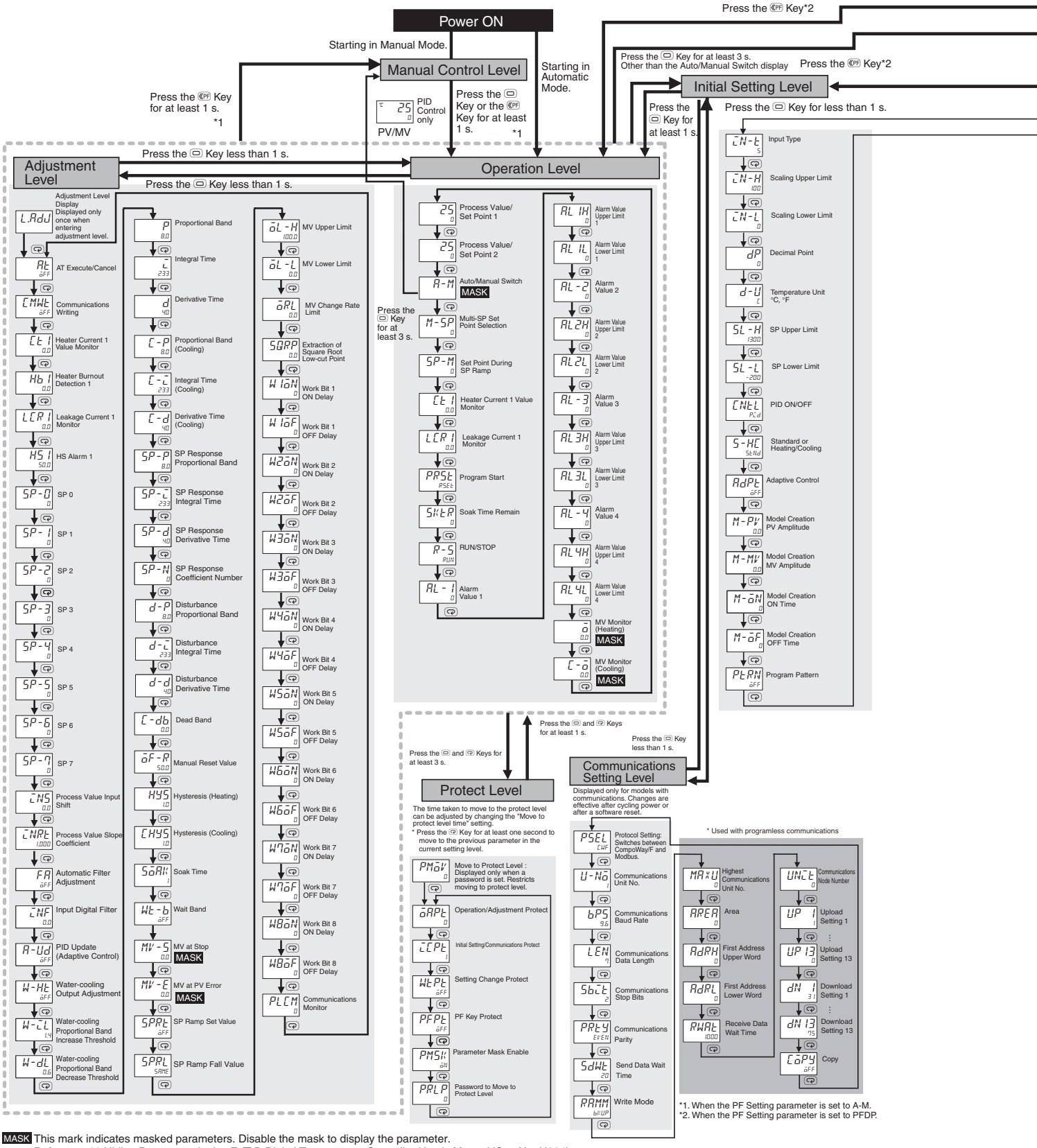

MASK This mark indicates masked parameters. Disable the mask to display the parameter.
Refer to *5-12 Hiding Parameters* in the *E5□D Digital Temperature Controller User's Manual* (Cat. No. H224).

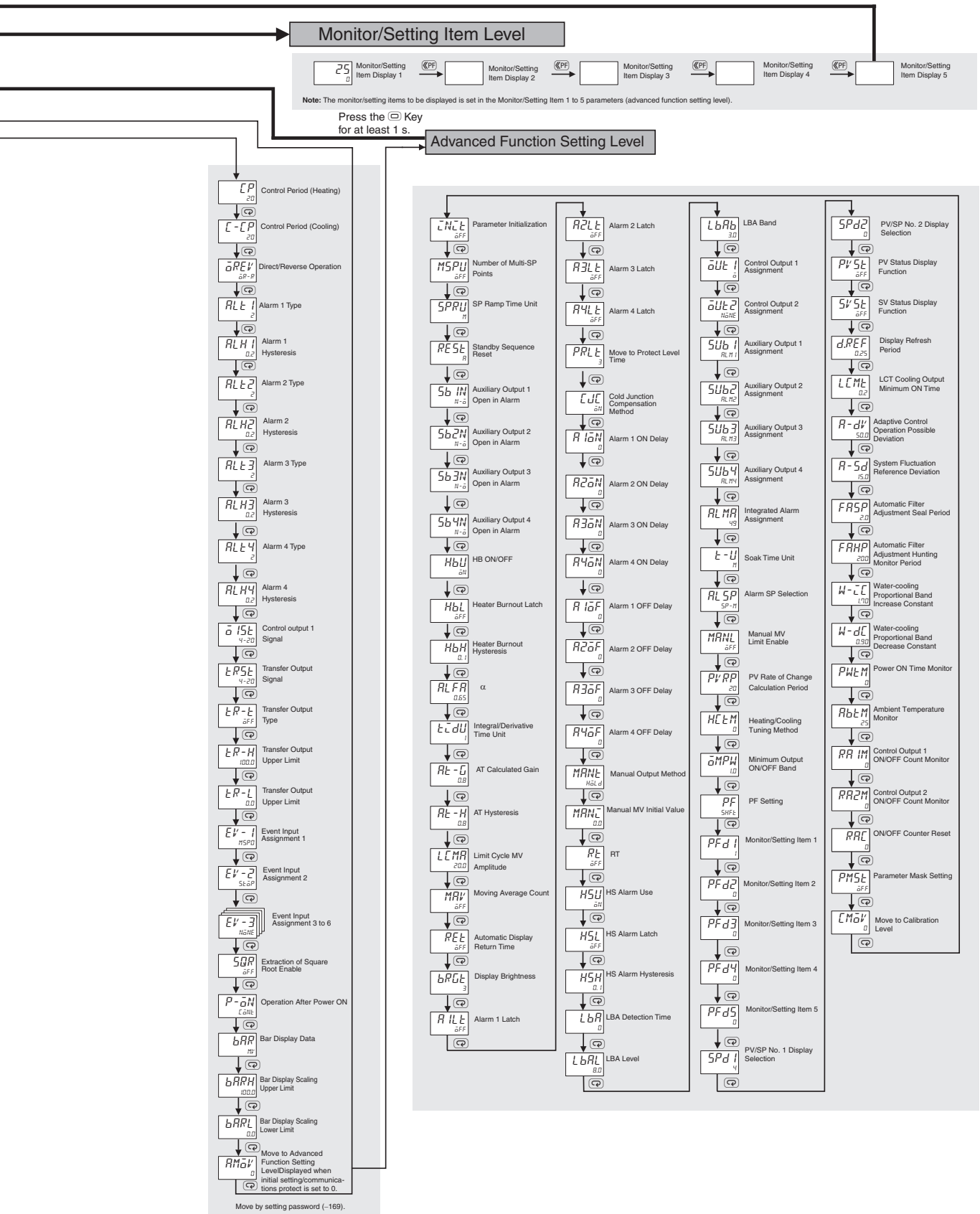
Monitor/Setting Item Level
Monitor/Setting Item Display 1
Monitor/Setting Item Display 2
Monitor/Setting Item Display 3
Monitor/Setting Item Display 4
Monitor/Setting Item Display 5
Note: The monitor/setting items to be displayed is set in the Monitor/Setting Item 1 to 5 parameters (advanced function setting level).
Press the Key for at least 1 s.
Advanced Function Setting Level
Control Period (Heating)
Control Period (Cooling)
Direct/Reverse Operation
Alarm 1 Type
Alarm 1 Hysteresis
Alarm 2 Type
Alarm 2 Hysteresis
Alarm 3 Type
Alarm 3 Hysteresis
Alarm 4 Type
Alarm 4 Hysteresis
Control output 1 Signal
Transfer Output Signal
Transfer Output Type
Transfer Output Upper Limit
Transfer Output Upper Limit
Event Input Assignment 1
Event Input Assignment 2
Event Input Assignment 3 to 6
Extraction of Square Root Enable
Operation After Power ON
Bar Display Data
Bar Display Scaling Upper Limit
Bar Display Scaling Lower Limit
Move to Advanced Function Setting LevelDisplayed when initial setting/communications protect is set to 0.
Move by setting password (–169).
Parameter Initialization
Number of Multi-SP Points
SP Ramp Time Unit
Standby Sequence Reset
Auxiliary Output 1 Open in Alarm
Auxiliary Output 2 Open in Alarm
Auxiliary Output 3 Open in Alarm
Auxiliary Output 4 Open in Alarm
HB ON/OFF
Heater Burnout Latch
Heater Burnout Hysteresis
α
Integral/Derivative Time Unit
AT Calculated Gain
AT Hysteresis
Limit Cycle MV Amplitude
Moving Average Count
Automatic Display Return Time
Display Brightness
Alarm 1 Latch
Alarm 2 Latch
Alarm 3 Latch
Alarm 4 Latch
Move to Protect Level Time
Cold Junction Compensation Method
Alarm 1 ON Delay
Alarm 2 ON Delay
Alarm 3 ON Delay
Alarm 4 ON Delay
Alarm 1 OFF Delay
Alarm 2 OFF Delay
Alarm 3 OFF Delay
Alarm 4 OFF Delay
Manual Output Method
Manual MV Initial Value
RT
HS Alarm Use
HS Alarm Latch
HS Alarm Hysteresis
LBA Detection Time
LBA Level
LBA Band
Control Output 1 Assignment
Control Output 2 Assignment
Auxiliary Output 1 Assignment
Auxiliary Output 2 Assignment
Auxiliary Output 3 Assignment
Auxiliary Output 4 Assignment
Integrated Alarm Assignment
Soak Time Unit
Alarm SP Selection
Manual MV Limit Enable
PV Rate of Change Calculation Period
Heating/Cooling Tuning Method
Minimum Output ON/OFF Band
PF Setting
Monitor/Setting Item 1
Monitor/Setting Item 2
Monitor/Setting Item 3
Monitor/Setting Item 4
Monitor/Setting Item 5
PV/SP No. 1 Display Selection
PV/SP No. 2 Display Selection
PV Status Display Function
SV Status Display Function
Display Refresh Period
LCT Cooling Output Minimum ON Time
Adaptive Control Operation Possible Deviation
System Fluctuation Reference Deviation
Automatic Filter Adjustment Seal Period
Automatic Filter Adjustment Hunting Monitor Period
Water-cooling Proportional Band Increase Constant
Water-cooling Proportional Band Decrease Constant
Power ON Time Monitor
Ambient Temperature Monitor
Control Output 1 ON/OFF Count Monitor
Control Output 2 ON/OFF Count Monitor
ON/OFF Counter Reset
Parameter Mask Setting
Move to Calibration Level

Error Displays (Troubleshooting)

When an error occurs, the No. 1 display or No. 2 display shows the error code.
Take necessary measure according to the error code, referring the following table.

Display	Name	Meaning		Action	Operation
S.ERR	Input error	The input value exceeded the control range.* The input type is not set correctly. The sensor is disconnected or short-circuited. The sensor is not wired correctly. The sensor is not wired. ✻ Control Range Temperature resistance thermometer or thermocouple input: SP Lower Limit - 20°C to SP Upper Limit + 20°C (SP Lower Limit - 40°F to SP Upper Limit + 40°F) ESIB input: Same as specified input range. Analog input: Scaling range -5% to 105%		Check the wiring for input to be sure it is wired correctly, not broken, and not shorted. Also check the input type. If there are no problems in the wiring or input type settings, cycle the power supply. If the display remains the same, replace the Digital Temperature Controller. If the display is restored to normal, then the probable cause is external noise affecting the control system. Check for external noise. **Note:** For a temperature resistance thermometer, the input is considered disconnected if the A, B, or B line is broken.	After the error occurs and it is displayed, the alarm output will operate as if the upper limit was exceeded. If an input error is assigned to a control output or auxiliary output, the output will turn ON when the input error occurs. The error message will appear in the display for the PV. **Note: 1.** The heating and cooling control outputs will turn OFF. **2.** When the manual MV, MV at stop, or MV at error is set, the control output is determined by the set value.
cccc	Display range exceeded	Below -1,999	This is not an error. It is displayed when the control range is wider than the display range and the PV exceeds the display range. The PV is displayed for the range that is given on the left (the number without the decimal point).	-	Control continues and operation is normal. The value will appear in the display for the PV. Refer to the E5□D Digital Temperature Controllers User's Manual (Cat. No. H224) for information on the controllable range.
____		Above 9,999			
E333	A/D converter error	There is an error in the internal circuits.		After checking the input error, turn the power OFF then back ON again. If the display remains the same, the controller must be repaired. If the display is restored to normal, then a probable cause can be external noise affecting the control system. Check for external noise.	The control outputs, auxiliary outputs, and transfer outputs turn OFF. (A linear voltage output will be approx. 0 mV.)
E111	Memory error	There is an error in the internal memory operation.		First, cycle the power supply. If the display remains the same, the controller must be repaired. If the display is restored to normal, then a probable cause can be external noise affecting the control system. Check for external noise.	The control outputs, auxiliary outputs, and transfer outputs turn OFF. (A linear voltage output will be approx. 0 mV.)
FFFF	Overcurrent	This error is displayed when the peak current exceeds 55.0 A.		-	Control continues and operation is normal. The error message will appear for the following displays. Heater Current Value 1 Monitor Leakage Current Value 1 Monitor
CE1 LCR1	HB or HS alarm	If there is a HB or HS alarm, the No. 1 display will flash in the relevant setting level.		-	The No. 1 display for the following parameter flashes in Operation Level or Adjustment Level. Heater Current Value 1 Monitor Leakage Current Value 1 Monitor However, control continues and operation is normal.
----	Ambient temperature out of monitor range	Ambient temperature exceeded the following display range. Temperature unit = °C: –30 to 75°C Temperature unit = °F: 10 to 171°F		Make sure that the ambient temperature of the Controller is within the rated range. The following factors may be present. Check them. • The Controller is subjected to heat radiated from heating equipment. • The Controller is subjected to direct sunlight. • The Controller is subjected to icing or condensation.	Control continues and operation is normal.

Safety Precautions

Be sure to read the precautions for all E5CD/E5ED models in the website at: http://www.ia.omron.com/.

Warning Indications

CAUTION	Indicates a potentially hazardous situation which, if not avoided, may result in minor or moderate injury or in property damage.
Precautions for Safe Use	Supplementary comments on what to do or avoid doing, to use the product safely.
Precautions for Correct Use	Supplementary comments on what to do or avoid doing, to prevent failure to operate, malfunction or undesirable effect on product performance.

Meaning of Product Safety Symbols

	Used for general CAUTION, WARNING, or DANGER precautions for which there is no specified symbol. (This symbol is also used as the alerting symbol, but shall not be used in this meaning on the product.)
	Used to warn of the risk of electric shock under specific conditions.
	Used for general prohibitions for which there is no specific symbol.
	Used to indicate prohibition when there is a risk of minor injury from electrical shock or other source if the product is disassembled.
	Used for general mandatory action precautions for which there is no specified symbol.

CAUTION

Minor injury due to electric shock may occasionally occur.
Do not touch the terminals while power is being supplied.

Electric shock, fire, or malfunction may occasionally occur.
Do not allow metal objects, conductors, debris (such as cuttings) from installation work, moisture, or other foreign matter to enter the Digital Temperature Controller, the Setup Tool ports, or between the pins on the connectors on the Setup Tool cable.
Attach the cover to the front-panel Setup Tool port whenever you are not using it to prevent foreign objects from entering the port.

Minor injury from explosion may occasionally occur.
Do not use the product where subject to flammable or explosive gas.

Minor electric shock or fire may occasionally occur.
Do not use a Digital Temperature Controller or cable that is damaged.

Minor electric shock, fire, or malfunction may occasionally occur.
Never disassemble, modify, or repair the product or touch any of the internal parts.

If the output relays are used past their life expectancy, contact fusing or burning may occasionally occur. Always consider the application conditions and use the output relays within their rated load and electrical life expectancy. The life expectancy of output relays varies considerably with the output load and switching conditions.

Loose screws may occasionally result in fire.
Tighten the terminal screws to the specified torque of 0.43 to 0.58 N·m.

Set the parameters of the product so that they are suitable for the system being controlled. If they are not suitable, unexpected operation may occasionally result in property damage or accidents.

A malfunction in the Digital Temperature Controller may occasionally make control operations impossible or prevent alarm outputs, resulting in property damage. To maintain safety in the event of malfunction of the Digital Temperature Controller, take appropriate safety measures, such as installing a monitoring device on a separate line.

Safety Standard

CAUTION - Risk of Fire and Electric Shock
a) This product is UL listed as Open Type Process Control Equipment. It must be mounted in an enclosure that does not allow fire to escape externally.
b) More than one disconnect switch may be required to de-energize the equipment before servicing.
c) Signal inputs are SELV, limited energy.*1
d) Caution: To reduce the risk of fire or electric shock, do not interconnect the outputs of different Class 2 circuits.*2

*1. An SELV (separated extra-low voltage) system is one with a power supply that has double or reinforced insulation between the primary and the secondary circuits and has an output voltage of 30 V r.m.s. max. and 42.4 V peak max. or 60 VDC max.
*2. A class 2 circuit is one tested and certified by UL as having the current and voltage of the secondary output restricted to specific levels.

Precautions for Safe Use

Be sure to observe the following precautions to prevent operation failure, malfunction, or adverse affects on the performance and functions of the product. Not doing so may occasionally result in unexpected events. Do not handle the Digital Temperature Controller in ways that exceed the ratings.

1. The product is designed for indoor use only. Do not use or store the product outdoors or in any of the following places.
   - Places directly subject to heat radiated from heating equipment.
   - Places subject to splashing liquid or oil atmosphere.
   - Places subject to direct sunlight.
   - Places subject to dust or corrosive gas (in particular, sulfide gas and ammonia gas).
   - Places subject to intense temperature change.
   - Places subject to icing and condensation.
   - Places subject to vibration and large shocks.
2. Use and store the Digital Temperature Controller within the rated ambient temperature and humidity. Gang-mounting two or more Digital Temperature Controllers, or mounting Digital Temperature Controllers above each other may cause heat to build up inside the Digital Temperature Controllers, which will shorten their service life. In such a case, use forced cooling by fans or other means of air ventilation to cool down the Digital Temperature Controllers.
3. To allow heat to escape, do not block the area around the Digital Temperature Controller. Do not block the ventilation holes on the Digital Temperature Controller.
4. Always check the terminal names and polarity and be sure to wire properly.
5. To connect bare wires, use copper stranded or solid wires.
   To prevent smoke emission and fire in the wiring material, check the rating of the wire and use the wire in the table below.

Recommended Wires

Model	Recommended wires	Stripping length
E5CD/E5ED (Screw Terminal Blocks)	AWG24 to AWG18 (0.21 to 0.82 mm^2)	6 to 8 mm
E5□D-B (Push-In Plus Terminal Blocks)	0.25 to 1.5 mm^2 (equivalent to AWG24 to AWG16)	Ferrules not used: 8 mm

Use the specified size of crimped terminals to wire the E5CD or E5ED.

Crimp Terminal Sizes

Model	Crimp terminal size
E5CD or E5ED	M3, Width: 5.8 mm max.

For the E5□D-B (Push-In Plus model), connect only one wire to each terminal.
For the E5CD/E5ED (Screw model), up to two wires of same size and type, or two crimp terminals, can be inserted into a single terminal.

6. Do not wire the terminals that are not used.
7. To avoid inductive noise, keep the wiring for the Digital Temperature Controller's terminal block away from power cables that carry high voltages or large currents. Also, do not wire power lines together with or parallel to Digital Temperature Controller wiring. Using shielded cables and using separate conduits or ducts is recommended.
   Attach a surge suppressor or noise filter to peripheral devices that generate noise (in particular, motors, transformers, solenoids, magnetic coils or other equipment that have an inductance component).
   When a noise filter is used at the power supply, first check the voltage or current, and attach the noise filter as close as possible to the Digital Temperature Controller.
   Allow as much space as possible between the Digital Temperature Controller and devices that generate powerful high frequencies (high-frequency welders, high-frequency sewing machines, etc.) or surge.
8. Use the Digital Temperature Controller within the rated load and power supply.
9. Make sure that the rated voltage is attained within 2 seconds of turning ON the power using a switch or relay contact. If the voltage is applied gradually, the power may not be reset or output malfunctions may occur.
10. Make sure that the Digital Temperature Controller has 30 minutes or more to warm up after turning ON the power before starting actual control operations to ensure the correct temperature display.
11. When using adaptive control, turn ON power for the load (e.g., heater) at the same time as or before supplying power to the Digital Temperature Controller. If power is turned ON for the Digital Temperature Controller before turning ON power for the load, tuning will not be performed properly and optimum control will not be achieved.
12. During tuning,* ensure that the power for the load (e.g., heater) is ON. If the power supply to the load (e.g., heater) is not turned ON during tuning, tuning results will not be calculated correctly and it will not be possible to achieve optimum control.
    * "Tuning" refers to the following functions: AT, adaptive control, automatic filter adjustment, and water-cooling output adjustment.
13. A switch or circuit breaker must be provided close to Digital Temperature Controller. The switch or circuit breaker must be within easy reach of the operator, and must be marked as a disconnecting means for Digital Temperature Controller.
14. Wipe off any dirt from the Digital Temperature Controller with a soft dry cloth. Never use thinners, benzine, alcohol, or any cleaners that contain these or other organic solvents. Deformation or discoloration may occur.
15. Design the system (e.g., control panel) considering the 2 seconds of delay in setting the Digital Temperature Controller's output after the power supply is turned ON.
16. The output will turn OFF when you move to the Initial Setting Level. Take this into consideration when performing control.
17. The number of non-volatile memory write operations is limited. Therefore, use RAM write mode when frequently overwriting data, e.g., through communications.
18. Always touch a grounded piece of metal before touching the Digital Temperature Controller to discharge static electricity from your body.
19. Use suitable tools when taking the Digital Temperature Controller apart for disposal. Sharp parts inside the Digital Temperature Controller may cause injury.
20. Install the DIN Track vertically to the ground.
21. Observe the following precautions when drawing out the body of the Digital Temperature Controller.
    - Follow the procedure given in *Drawing Out the Interior Body of the Digital Temperature Controller to Replace It* on page 47.
    - Turn OFF the power supply before you start and never touch nor apply shock to the terminals or electric components.
      When you insert the interior body of the Digital Temperature Controller, do not allow the electronic components to touch the rear case.
    - When you insert the interior body into the rear case, confirm that the hooks on the top and bottom are securely engaged with the case.
    - If the terminals are corroded, replace the rear case as well.
22. For the power supply voltage input, use a commercial power supply with an AC input. Do not use the output from an inverter as the power supply. Depending on the output characteristics of the inverter, temperature increases in the product may cause smoke or fire damage even if the product has a specified output frequency of 50/60 Hz.
23. Do not continue to use the Digital Temperature Controller if the front surface peels.
24. Do not exceed the communications distance that is given in the specifications and use the specified communications cable. Refer to the *E5□D Digital Temperature Controllers User's Manual* (Cat. No. H224) for information on the communications distances and cables for the E5□D.
25. Do not turn the power supply to the Digital Temperature Controller ON or OFF while the USB-Serial Conversion Cable is connected. The Digital Temperature Controller may malfunction.

26. Do not place heavy objects on top of the USB-Serial Conversion Cable, bend the Cable beyond its natural bending limit, or pull on the Cable. Doing so may result in failure.
27. Make sure that the indicators on the USB-Serial Conversion Cable are operating properly. Depending on the application conditions, deterioration in the connectors and cable may be accelerated, and normal communications may become impossible. Perform periodic inspection and replacement.
28. Do not disconnect the USB-Serial Conversion Cable while communications are in progress. The Digital Temperature Controller may be damaged or may malfunction.
29. Connectors may be damaged if they are inserted with excessive force. When connecting a connector, always make sure that it is oriented correctly. Do not force the connector if it does not connect smoothly.
30. Do not touch the external power supply terminals or other metal parts of the cables on the Digital Temperature Controller.
31. Noise may enter on the USB-Serial Conversion Cable, possibly causing equipment malfunctions. Do not leave the USB-Serial Conversion Cable connected constantly to the equipment.
32. With the E5ED/E5ED-B, do not connect cables to both the front-panel Setup Tool port and the top-panel Setup Tool port at the same time. The Digital Temperature Controller may be damaged or may malfunction.
33. Observe the following precautions when you wire the E5□D-B.
- Always follow the *E5□D-B (Models with Push-In Plus Terminal Blocks)* in *E5□D Digital Temperature Controllers User's Manual* (Cat. No. H224).
- Do not wire anything to the release holes.
- Do not tilt or twist a flat-blade screwdriver while it is inserted into a release hole on the terminal block. The terminal block may be damaged.
- Insert a flat-blade screwdriver into the release holes at an angle. The terminal block may be damaged if you insert the screwdriver straight in.
- Do not allow the flat-blade screwdriver to fall out while it is inserted into a release hole.
- Do not bend a wire past its natural bending radius or pull on it with excessive force. Doing so may cause the wire to break.
- Do not use crossover wiring except for the input power supply and communications.

Precautions for Correct Use

Service Life

1. Use the Digital Temperature Controller within the following temperature and humidity ranges:
Temperature: –10 to 55°C (with no icing or condensation),
Humidity: 25% to 85%
If the Digital Temperature Controller is installed inside a control board, the ambient temperature must be kept to under 55°C, including the temperature around the Digital Temperature Controller.
2. The service life of electronic devices like Digital Temperature Controllers is determined not only by the number of times the relay is switched but also by the service life of internal electronic components. Component service life is affected by the ambient temperature: the higher the temperature, the shorter the service life and, the lower the temperature, the longer the service life. Therefore, the service life can be extended by lowering the temperature of the Digital Temperature Controller.
3. When two or more Digital Temperature Controllers are mounted horizontally close to each other or vertically next to one another, the internal temperature will increase due to heat radiated by the Digital Temperature Controllers and the service life will decrease. In such a case, use forced cooling by fans or other means of air ventilation to cool down the Digital Temperature Controllers. When providing forced cooling, however, be careful not to cool down the terminals sections alone to avoid measurement errors.

Ensuring Measurement Accuracy

1. When extending or connecting the thermocouple lead wire, be sure to use compensating wires that match the thermocouple types.
2. When extending or connecting the lead wire of the platinum resistance thermometer, be sure to use wires that have low resistance and keep the resistance of the three lead wires the same.
3. Mount the Digital Temperature Controller so that it is horizontally level.
4. If the measurement accuracy is low, check to see if input shift has been set correctly.

Resistance to Water

The degree of protection is as shown below. Sections without any specification on their degree of protection or those with IP□0 are not waterproof.
Front panel: IP66
Rear case: IP20, Terminal section: IP00
When waterproofing is required, insert the Waterproof Packing on the backside of the front panel.
Keep the Port Cover on the front-panel Setup Tool port of the E5ED/E5ED-B securely closed. The degree of protection when the Waterproof Packing is used is IP66. To maintain an IP66 degree of protection, the Waterproof Packing and the Port Cover for the front-panel Setup Tool port must be periodically replaced because they may deteriorate, shrink, or harden depending on the operating environment.
The replacement period will vary with the operating environment. Check the required period in the actual application. Use 3 years or sooner as a guideline. If the Waterproof Packing and Port Cover are not periodically replaced, waterproof performance may not be maintained.
If a waterproof structure is not required, then the Waterproof Packing does not need to be installed.

Precautions during Operation

1. It takes approximately two seconds for the outputs to turn ON from after the power supply is turned ON. Design the system (e.g., control panel) to allow for this delay.
2. Make sure that the Digital Temperature Controller has 30 minutes or more to warm up after turning ON the power before starting actual control operations to ensure the correct temperature display.
3. Avoid using the Digital Temperature Controller in places near a radio, television set, or wireless installing. The Digital Temperature Controller may cause radio disturbance for these devices.

Others

1. Do not rapidly and repeatedly insert and disconnect the USB connector on the USB-Serial Conversion Cable. The computer may operate incorrectly.
2. The personal computer requires time to recognize the cable connection after the USB connector is connected to the personal computer. This delay does not indicate failure. Check the COM port number before starting communications.
3. Do not connect to a personal computer through a USB hub. The USB-Serial Conversion Cable may malfunction.
4. Do not extend the USB cable with an extension cable to connect to the personal computer. The USB-Serial Conversion Cable may malfunction.

Mounting

E5CD/E5CD-B

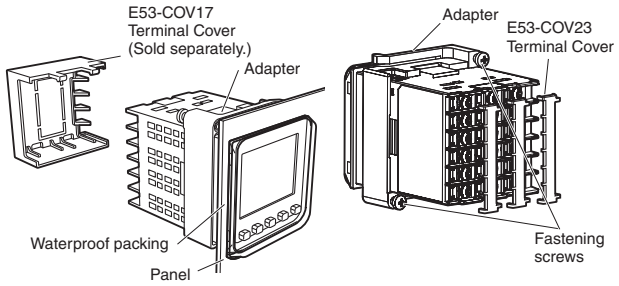

Mounting to the Panel (E5CD/E5CD-B)

1. For waterproof mounting, waterproof packing must be installed on the Digital Temperature Controller. Waterproofing is not possible when group mounting several Digital Temperature Controllers.
2. Insert the E5CD/E5CD-B into the mounting hole in the panel.
3. Push the Adapter from the terminals up to the panel, and temporarily fasten the E5CD/E5CD-B.
4. Tighten the two fastening screws on the Adapter. Alternately tighten the two screws little by little to maintain a balance. Tighten the screws to a torque of 0.29 to 0.39 N·m.

Mounting the Terminal Cover (E5CD only)

There are two models of Terminal Covers that you can use with the E5CD.
Slightly bend the E53-COV23 Terminal Cover to attach it to the terminal block as shown in the following diagram. The Terminal Cover cannot be attached in the opposite direction. Or, you can use the E53-COV17 Terminal Cover. Make sure that the “UP” mark is facing up, and then attach the E53-COV17 Terminal Cover to the holes on the top and bottom of the Digital Temperature Controller.

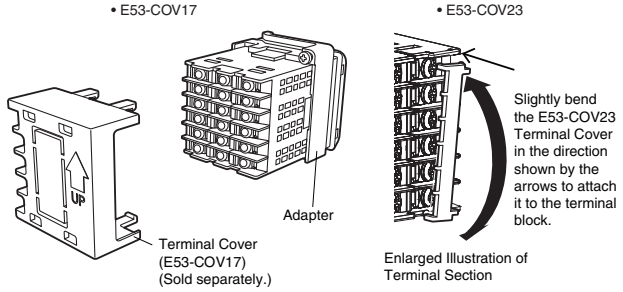

E5ED/E5ED-B

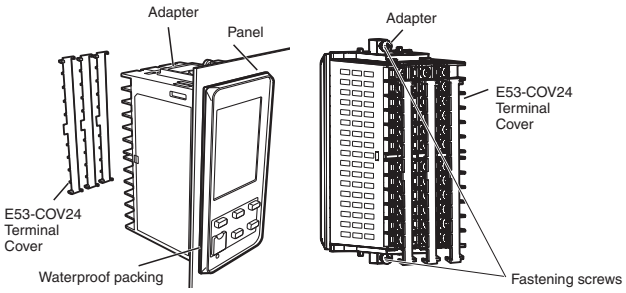

Mounting to the Panel (E5ED/E5ED-B)

1. For waterproof mounting, waterproof packing must be installed on the Digital Temperature Controller. Waterproofing is not possible when group mounting several Digital Temperature Controllers.
2. Insert the E5ED/E5ED-B into the mounting hole in the panel.
3. Push the Adapter from the terminals up to the panel, and temporarily fasten the E5ED/E5ED-B.
4. Tighten the two fastening screws on the Adapter. Alternately tighten the two screws little by little to maintain a balance. Tighten the screws to a torque of 0.29 to 0.39 N·m.

Mounting the Terminal Cover (E5ED only)

Slightly bend the E53-COV24 Terminal Cover to attach it to the terminal block as shown in the following diagram. The Terminal Cover cannot be attached in the opposite direction.

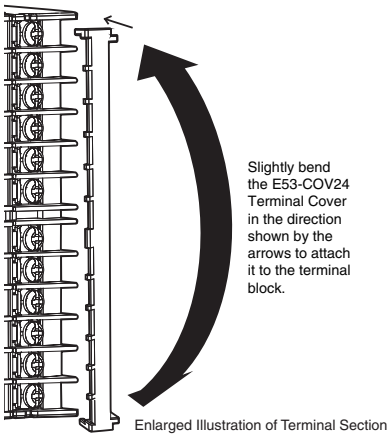

Drawing Out the Interior Body of the Digital Temperature Controller to Replace It

You can use the Draw-out Jig to remove the interior body of the Digital Temperature Controller from the case to perform maintenance without removing the terminal leads. Use the Y92F-58 Draw-out Jig for the E5CD and the Y92F-59 Draw-out Jig for the E5ED. Check the specifications of the case and Digital Temperature Controller before removing the interior body from the case. (Drawout is not possible on the E5□D-B.)

1. Draw out the interior body from the rear case.

1. Align the arms on the Draw-out Jig with the top of the front panel on the Digital Temperature Controller and position it vertically. (The Y92F-58 is shown in the figure.)

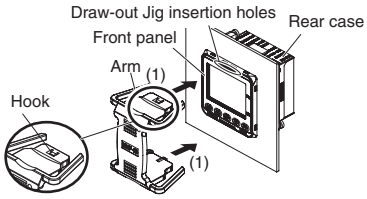

2. Align the hooks on the Draw-out Jig with the Draw-out Jig insertion holes on the Digital Temperature Controller and slowly insert the Draw-out Jig into the Draw-out Jig insertion holes laterally until it clicks into place. (If you attempt to draw out the interior body of the Digital Temperature Controller when only one hook is engaged, the Digital Temperature Controller may be damaged.) (The Y92F-58 is shown in the figure.)
3. Pull out the Draw-out Jig together with the front panel. Do not pull with excessive force. Slowly pull out the Digital Temperature Controller laterally. (If you pull the interior body out at an angle, the Digital Temperature Controller may be damaged.)

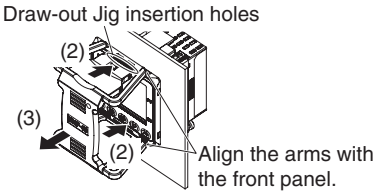

4. After the interior body is free from the rear case, support the interior body with one hand and pull it out slowly in a horizontal direction.

2. Prepare the new interior body.

1. Place the Digital Temperature Controller flat on a table and slowly insert the Draw-out Jig into the Draw-out Jig insertion holes laterally until it clicks into place. (There is a hole at both the top and bottom.) (The E5CD is shown in the figure.)
2. Place the Digital Temperature Controller on a table facing upward.
3. Hold the rear case with your hand and slowly draw out the interior body in a vertical direction. If you draw out the interior body horizontally while holding the Digital Temperature Controller in your hand, the interior body will fall and may be damaged.

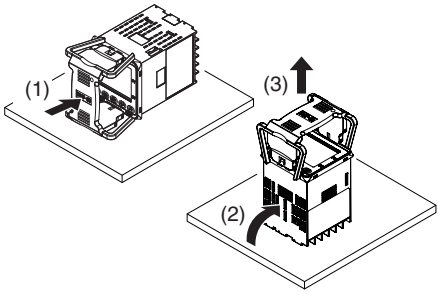

3. Insert the new interior body into the rear case.

1. When inserting the interior body back into the rear case, mount the sealing rubber in the position shown below, make sure the PCBs are parallel to each other, and press the interior body toward the rear case and into position, making sure that the sealing rubber does not move.

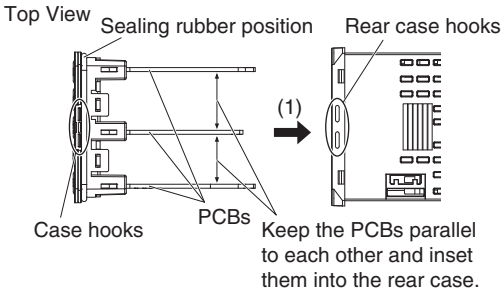

2. When you press the Digital Temperature Controller into position, press down on the rear case hooks so that the case hooks securely lock in place. (There are rear case hooks at both the top and bottom of the rear case.) If the Digital Temperature Controller is not correctly mounted into the rear case, the rear case may not be waterproof. When inserting the Digital Temperature Controller, do not allow the electronic components to touch the rear case. (The E5CD is shown in the figure.)

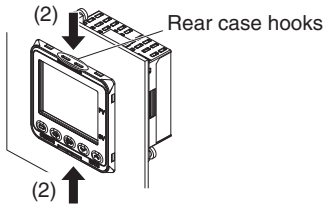

Removing the draw-out jig when only one hook is caught in the draw-out jig insertion hole

1. Pull the Draw-out Jig slowly in the direction shown in the figure. (This step is the same even if the other hook is caught.)
2. Confirm that the Draw-out Jig is free of the Draw-out Jig insertion hole.
3. If the interior body separates from the rear case, slowly press the interior body into the rear case in a horizontal direction. (The E5CD is shown in the figure.) If you do not follow the procedures above, the Digital Temperature Controller may be damaged.

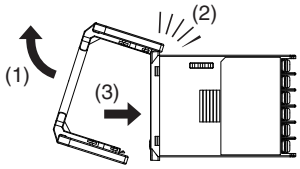

Precautions when Wiring

- Separate input leads and power lines in order to prevent external noise.
- Use crimp terminals when wiring the screw terminals.
- Use the suitable wiring material and crimp tools for crimp terminals.
- Tighten the terminal screws to a torque of 0.43 to 0.58 N·m.

E5CD/E5ED (Screw Terminal Blocks)

Wires

Use the wire specifications given in the following table.

Model	Recommended wires	Stripping length
E5CD or E5ED	AWG24 to AWG18 (0.205 to 0.823 mm^2)	6 to 8 mm (when crimp terminals are not used)

- Strip the wires on which crimp terminals will be used to the length recommended by the crimp terminal manufacturer.
- Use shielded twisted-pair cables for signal lines to prevent the influence of noise.

Crimp Terminals

For the E5CD or E5ED, use the following types of crimp terminals for M3 screws.

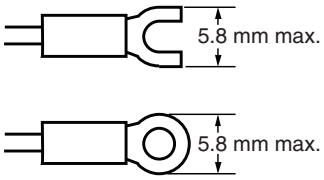

Although you can connect two crimp terminals with insulation sleeves to one terminal, you cannot do so if the diameter of the insulation sleeves is too large.
Select a crimp terminal that can be tightened as shown below.

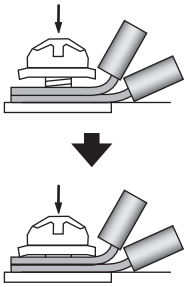

Some terminal blocks have a large crimp part. In this case, bend the terminal in advance as shown in the figure, and tighten slowly to ensure that the terminal screw is vertical to the terminal surface of the terminal block.

E5□D-B (Push-In Plus terminal block types)

1. Connecting Wires to Push-In Plus Terminal Block

Part Names of the Terminal Block

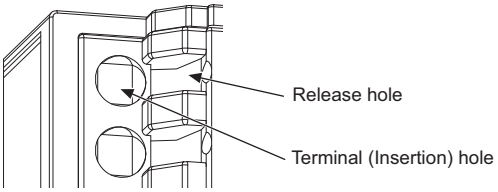

Connecting Wires with Ferrules and Solid Wires

Insert the solid wire or ferrule straight into the terminal block until the end strikes the terminal block.

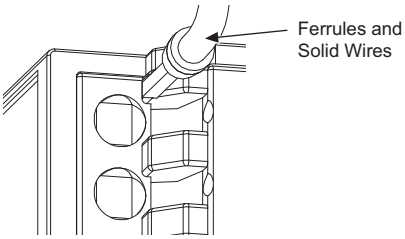

If a wire is difficult to connect because it is too thin, use a flat-blade screwdriver in the same way as when connecting stranded wire.

Connecting Stranded Wires

Use the following procedure to connect the wires to the terminal block.

1. Hold a flat-blade screwdriver at an angle and insert it into the release hole. The angle should be between 10° and 15°. If the flat-blade screwdriver is inserted correctly, you will feel the spring in the release hole.
2. With the screwdriver still inserted into the release hole, insert the wire into the terminal hole until it strikes the terminal block.
3. Remove the flat-blade screwdriver from the release hole.

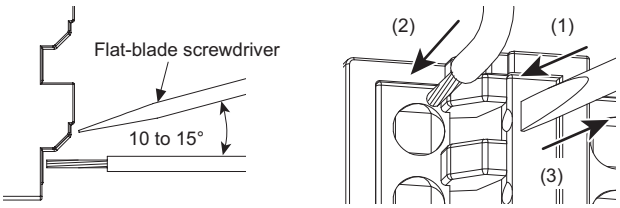

Checking Connections

- After the insertion, pull gently on the wire to make sure that it will not come off and the wire is securely fastened to the terminal block.
- If you use a ferrule with a conductor length of 10 mm, part of the conductor may be visible after the ferrule is inserted into the terminal block, but the product insulation distance will still be satisfied.

2. Removing Wires from Push-In Plus Terminal Block

Use the following procedure to remove wires from the terminal block. The same method is used to remove stranded wires, solid wires, and ferrules.

1. Hold a flat-blade screwdriver at an angle and insert it into the release hole.
2. With the screwdriver still inserted into the release hole, remove the wire from the terminal insertion hole.
3. Remove the flat-blade screwdriver from the release hole.

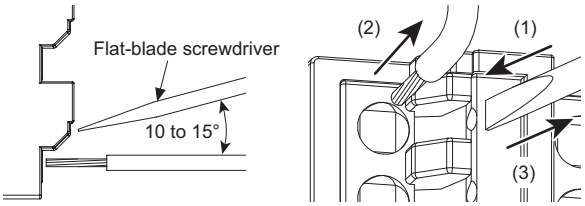

3. Recommended Ferrules and Crimp Tools
Recommended wires (Stranded wire/Solid wire)

Recommended wire	Stripping length (Ferrules not used)
0.25-1.5 mm²/AWG24-16	8 mm

Recommended ferrules

Applicable wire		Ferrule Conductor length (mm)	Wire Stripping length (mm) (Ferrules used)	Recommended ferrules		
(mm²)	(AWG)			Phoenix Contact product	Weidmuller product	Wago product
0.25	24	8	10	AI 0,25-8	H0.25/12	216-301
		10	12	AI 0,25-10	---	---
0.34	22	8	10	AI 0,34-8	H0.34/12	216-302
		10	12	AI 0,34-10	---	---
0.5	20	8	10	AI 0,5-8	H0.5/14	216-201
		10	12	AI 0,5-10	H0.5/16	216-241
0.75	18	8	10	AI 0,75-8	H0.75/14	216-202
		10	12	AI 0,75-10	H0.75/16	216-242
1/1.25	18/17	8	10	AI 1-8	H1.0/14	216-203
		10	12	AI 1-10	H1.0/16	216-243
1.25/1.5	17/16	8	10	AI 1,5-8	H1.5/14	216-204
		10	12	AI 1,5-10	H1.5/16	216-244
Recommended crimp tool				CRIMPFOX6 CRIMPFOX6T-F CRIMPFOX10S	PZ6 roto	Variocrimp4

*1. Make sure that the outer diameter of the wire coating is smaller than the inner diameter of the insulation sleeve of the recommended ferrule.
*2. Make sure that the ferrule processing dimensions conform to the following figures.

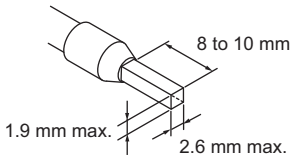

Recommended Flat-blade Screwdriver

Use a flat-blade screwdriver to connect and remove wires.
Use the following flat-blade screwdriver.
The following table shows manufacturers and models as of 2015/Dec

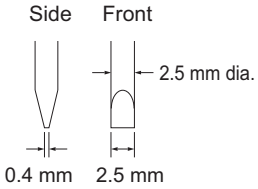

Model	Manufacturer
ESD 0,40×2,5	Wera
SZS 0,4×2,5 SZF 0-0,4×2,5 ✻	Phoenix Contact
0.4×2.5×75 302	Wiha
AEF.2,5×75	Facom
210-719	Wago
SDI 0.4×2.5×75	Weidmuller

✻ OMRON's exclusive purchase model XW4Z-00B is available to order as SZF 0-0,4×2,5 (manufactured by Phoenix Contact).

Three-year Guarantee

Period of Guarantee

The guarantee period of the Unit is three years starting from the date the Unit is shipped from the factory.

Scope of Guarantee

The Unit is guaranteed under the following operating conditions.

1. Average Operating Temperature (see note): –10°C to 50°C
2. Mounting Method: Standard mounting (Mounted to panel or DIN Track.)

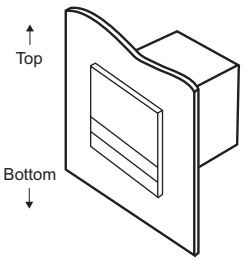

Example: Mounted to Panel

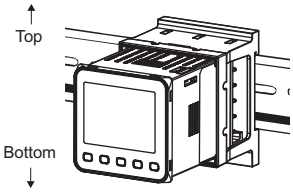

Example: Mounted to DIN Track

Note: Average Operating Temperature
Refer to the process temperature of the Unit mounted to a control panel and connected to peripheral devices on condition that the Unit is in stable operation, sensor input type K is selected for the Unit, the positive and negative thermocouple input terminals of the Unit are short-circuited, and the ambient temperature is stable.

Should the Unit malfunction during the guarantee period, OMRON shall repair the Unit or replace any parts of the Unit at the expense of OMRON

Temperature Sensors for Packaging Machines
E52

Accurately Measure Seal Temperature. Temperature Sensors for Packaging Machines.

- Heat resistance (sleeve: 0 to 260°C) and direct installation to heat bars.
- Greater flexibility in the movable section (models with 30 cores).
- Protective tubing diameter of 1 mm with ground for high-speed response.
- Usage together with the automatic filter adjustment function of E5□D Digital Temperature Controllers is recommended.
- New models with ferrules to help reduce wiring work have been added to the previous models with M3 screw connections.

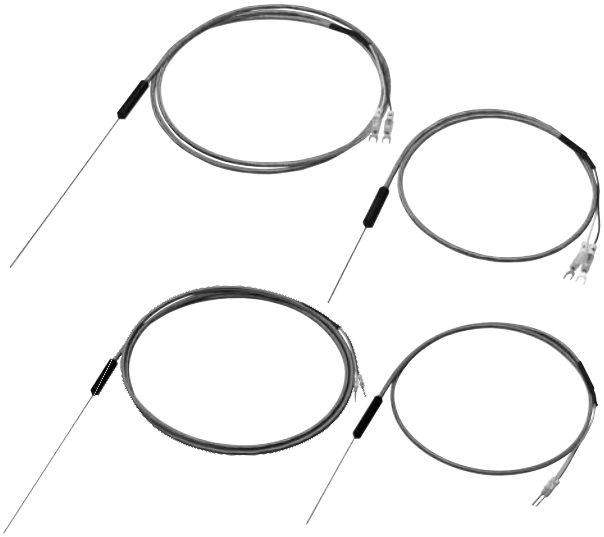

Refer to *Safety Precautions* for the E5CD/E5ED Digital Temperature Controllers on page 43.

Temperature Sensors for Packaging Machines

Classification	Description	Model and appearance	Temperature range	Element type	Conductor type	Class	Protective tubing material	Terminal type
Special models for packaging machines	Sheathed thermocouple	E52-CA□A□ D=1 S□	0 to 650°C	K (CA)	Grounded type	2 (0.75)	ASTM316L	Exposed lead wires

Special models for Packaging Machines

Model Number Legend

The type of protective tubing length, and lead length can be specified as shown below.

E52-CA□A□ D=1 S□ □M

Code	Element type
CA	K

Protective tubing length L (cm)
Specify the length in centimeters within the following range: Unit (cm)

Diameter (D)	Length (L)
1.0	6
1.0	12

Code	Terminal type
A	Exposed lead wires

Code	Terminal processing
Y	Y-type crimp terminals for M3.0
F	Ferrules

Code	Protective tubing diameter (D)	Protective tubing structure
D=1	1 mm	Sheathed

Code	Application
S	Temperature sensors for packaging machines

Code	Compensating conductor
1	Heat resistant (7 cores)
2	Flexible and heat resistant (30 cores)

Lead wire length M (m)
Specify the M length in meters.
Range: 0.5, 1, 2 m

Example:
Element: K, protective tubing length: 12 cm, exposed leads, Y-type crimp terminals for M3.0, protective tubing diameter: 1 mm, flexible and heat resistive, lead length: 2 m

E52-CA12AY D=1 S2 2M

Dimensions

Y-type crimp terminals for M3.0

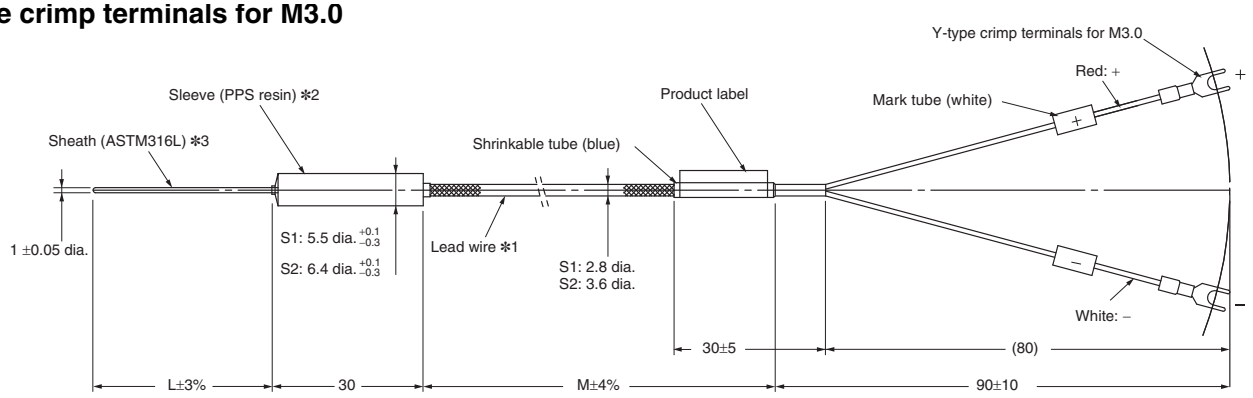

Ferrules

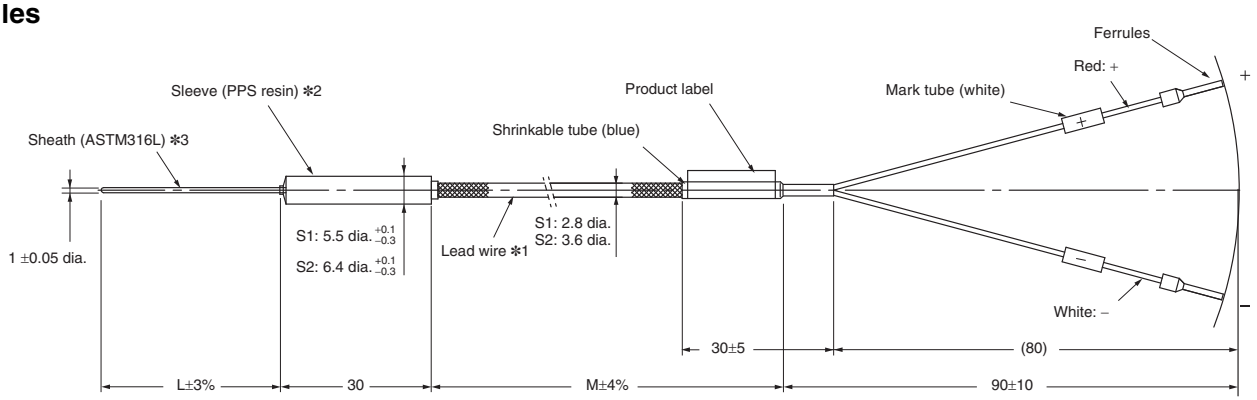

✻1. Lead wires (compensating conductor) (excluding Y-type crimp terminals)
Heat-resistance model (0 to 200°C): PFA glass-wool sheath with stainless outer shield
Flexible, heat-resistance model (0 to 200°C): PFA glass-wool sheath with stainless outer shield
✻2. Temperature range of sleeve: 0 to 260°C
✻3. The sheath can be easily bent. Performance will not be adversely affected even if the sheath is bent somewhat.
Do not bend the sheath beyond the following value.
Minimum bending radius: 2 mm
Bendable section: 8 mm or farther from the end

List of Models

Y-type crimp terminals for M3.0

Terminal type	Protective tubing diameter D (mm)	Protective tubing length L (cm)	Lead wire type	Lead wire length M (m)		
				0.5	1	2
				Model		
Exposed-lead Models	1 dia.	6	Heat resistive	E52-CA6AY D=1 S1 0.5M	E52-CA6AY D=1 S1 1M	---
			Flexible Heat resistive	---	E52-CA6AY D=1 S2 1M	E52-CA6AY D=1 S2 2M
		12	Heat resistive	E52-CA12AY D=1 S1 0.5M	E52-CA12AY D=1 S1 1M	---
			Flexible Heat resistive	---	E52-CA12AY D=1 S2 1M	E52-CA12AY D=1 S2 2M

Ferrules

Terminal type	Protective tubing diameter D (mm)	Protective tubing length L (cm)	Lead wire type	Lead wire length M (m)		
				0.5	1	2
				Model		
Exposed-lead Models	1 dia.	6	Heat resistive	E52-CA6AF D=1 S1 0.5M	E52-CA6AF D=1 S1 1M	---
			Flexible Heat resistive	---	E52-CA6AF D=1 S2 1M	E52-CA6AF D=1 S2 2M
		12	Heat resistive	E52-CA12AF D=1 S1 0.5M	E52-CA12AF D=1 S1 1M	---
			Flexible Heat resistive	---	E52-CA12AF D=1 S2 1M	E52-CA12AF D=1 S2 2M

Installation Method

A Temperature Sensor for Packing Machines has a diameter of 1.0 mm.
To measure the temperature close to the seal surface, mount the Sensor as close as possible to the surface.

The following installation methods are assumed.

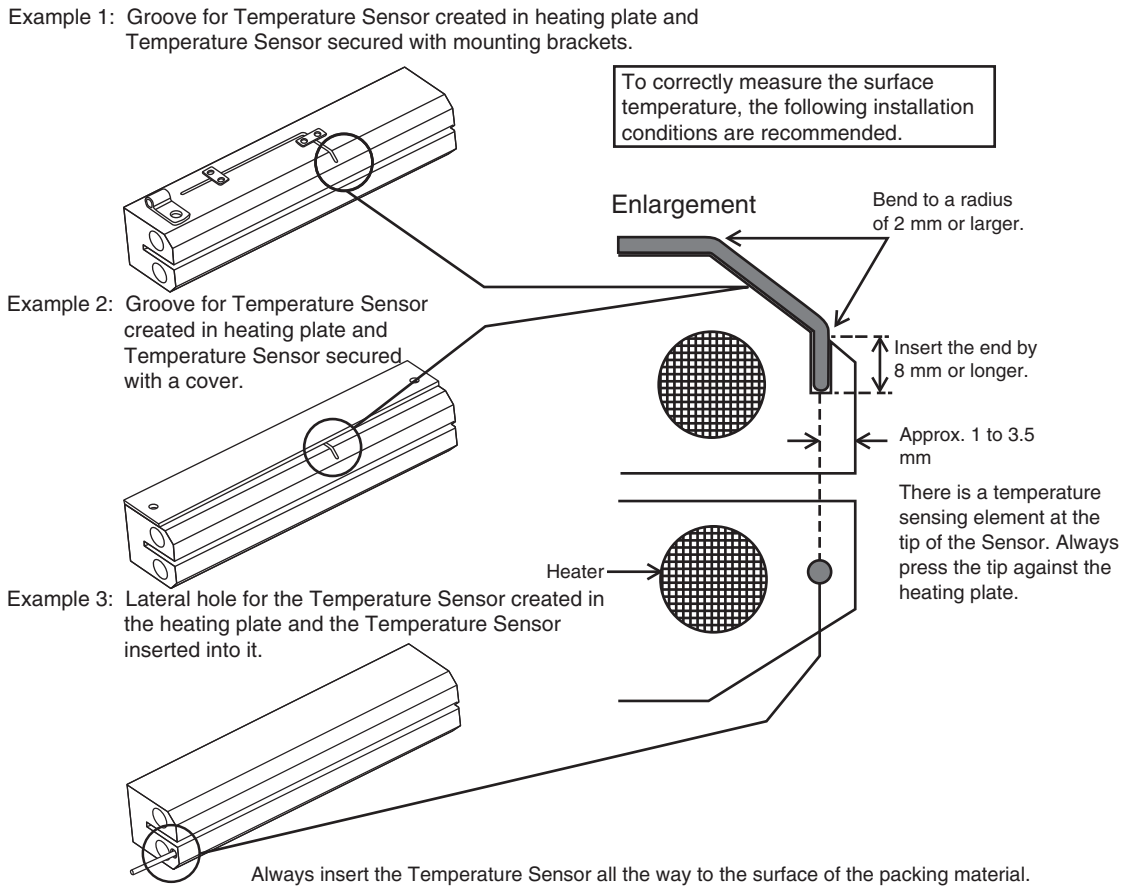

Use the following brackets or the equivalent to mount a Temperature Sensor for Packaging Machines to a hot plate.

Mounting bracket	Application	Manufacturer	Model number
(1)	1-mm-dia. protective tube bracket	Misumi Corporation	Square Shims ASFCS-series
(2)	Sleeve bracket (S1)	Misumi Corporation	Cable Clips COPU3-20P
		Digi-Key	Cable Clamp RPC1156-ND
	Sleeve bracket (S2)	Misumi Corporation	Cable Clips COPU4-20P
		Digi-Key	Cable Clamp RPC1474-ND

Note: All of the above mounting brackets are SUS304.

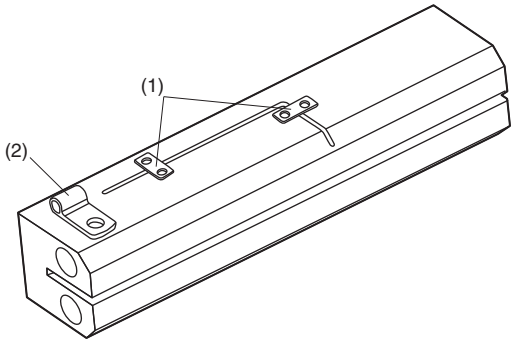

MEMO

Terms and Conditions Agreement

Read and understand this catalog.

Please read and understand this catalog before purchasing the products. Please consult your OMRON representative if you have any questions or comments.

Warranties.

(a) Exclusive Warranty. Omron's exclusive warranty is that the Products will be free from defects in materials and workmanship for a period of twelve months from the date of sale by Omron (or such other period expressed in writing by Omron). Omron disclaims all other warranties, express or implied.

(b) Limitations. OMRON MAKES NO WARRANTY OR REPRESENTATION, EXPRESS OR IMPLIED, ABOUT NON-INFRINGEMENT, MERCHANTABILITY OR FITNESS FOR A PARTICULAR PURPOSE OF THE PRODUCTS. BUYER ACKNOWLEDGES THAT IT ALONE HAS DETERMINED THAT THE PRODUCTS WILL SUITABLY MEET THE REQUIREMENTS OF THEIR INTENDED USE.

Omron further disclaims all warranties and responsibility of any type for claims or expenses based on infringement by the Products or otherwise of any intellectual property right. (c) Buyer Remedy. Omron's sole obligation hereunder shall be, at Omron's election, to (i) replace (in the form originally shipped with Buyer responsible for labor charges for removal or replacement thereof) the non-complying Product, (ii) repair the non-complying Product, or (iii) repay or credit Buyer an amount equal to the purchase price of the non-complying Product; provided that in no event shall Omron be responsible for warranty, repair, indemnity or any other claims or expenses regarding the Products unless Omron's analysis confirms that the Products were properly handled, stored, installed and maintained and not subject to contamination, abuse, misuse or inappropriate modification. Return of any Products by Buyer must be approved in writing by Omron before shipment. Omron Companies shall not be liable for the suitability or unsuitability or the results from the use of Products in combination with any electrical or electronic components, circuits, system assemblies or any other materials or substances or environments. Any advice, recommendations or information given orally or in writing, are not to be construed as an amendment or addition to the above warranty.

See http://www.omron.com/global/ or contact your Omron representative for published information.

Limitation on Liability; Etc.

OMRON COMPANIES SHALL NOT BE LIABLE FOR SPECIAL, INDIRECT, INCIDENTAL, OR CONSEQUENTIAL DAMAGES, LOSS OF PROFITS OR PRODUCTION OR COMMERCIAL LOSS IN ANY WAY CONNECTED WITH THE PRODUCTS, WHETHER SUCH CLAIM IS BASED IN CONTRACT, WARRANTY, NEGLIGENCE OR STRICT LIABILITY.

Further, in no event shall liability of Omron Companies exceed the individual price of the Product on which liability is asserted.

Suitability of Use.

Omron Companies shall not be responsible for conformity with any standards, codes or regulations which apply to the combination of the Product in the Buyer's application or use of the Product. At Buyer's request, Omron will provide applicable third party certification documents identifying ratings and limitations of use which apply to the Product. This information by itself is not sufficient for a complete determination of the suitability of the Product in combination with the end product, machine, system, or other application or use. Buyer shall be solely responsible for determining appropriateness of the particular Product with respect to Buyer's application, product or system. Buyer shall take application responsibility in all cases.

NEVER USE THE PRODUCT FOR AN APPLICATION INVOLVING SERIOUS RISK TO LIFE OR PROPERTY OR IN LARGE QUANTITIES WITHOUT ENSURING THAT THE SYSTEM AS A WHOLE HAS BEEN DESIGNED TO ADDRESS THE RISKS, AND THAT THE OMRON PRODUCT(S) IS PROPERLY RATED AND INSTALLED FOR THE INTENDED USE WITHIN THE OVERALL EQUIPMENT OR SYSTEM.

Programmable Products.

Omron Companies shall not be responsible for the user's programming of a programmable Product, or any consequence thereof.

Performance Data.

Data presented in Omron Company websites, catalogs and other materials is provided as a guide for the user in determining suitability and does not constitute a warranty. It may represent the result of Omron's test conditions, and the user must correlate it to actual application requirements. Actual performance is subject to the Omron's Warranty and Limitations of Liability.

Change in Specifications.

Product specifications and accessories may be changed at any time based on improvements and other reasons. It is our practice to change part numbers when published ratings or features are changed, or when significant construction changes are made. However, some specifications of the Product may be changed without any notice. When in doubt, special part numbers may be assigned to fix or establish key specifications for your application. Please consult with your Omron's representative at any time to confirm actual specifications of purchased Product.

Errors and Omissions.

Information presented by Omron Companies has been checked and is believed to be accurate; however, no responsibility is assumed for clerical, typographical or proofreading errors or omissions.

OMRON Corporation **Industrial Automation Company**
Kyoto, JAPAN
Contact: www.ia.omron.com

Regional Headquarters
OMRON EUROPE B.V.
Wegalaan 67-69, 2132 JD Hoofddorp
The Netherlands
Tel: (31)2356-81-300/Fax: (31)2356-81-388

OMRON ELECTRONICS LLC
2895 Greenspoint Parkway, Suite 200
Hoffman Estates, IL 60169 U.S.A.
Tel: (1) 847-843-7900/Fax: (1) 847-843-7787

OMRON ASIA PACIFIC PTE. LTD.
No. 438A Alexandra Road # 05-05/08 (Lobby 2),
Alexandra Technopark,
Singapore 119967
Tel: (65) 6835-3011/Fax: (65) 6835-2711

OMRON (CHINA) CO., LTD.
Room 2211, Bank of China Tower,
200 Yin Cheng Zhong Road,
PuDong New Area, Shanghai, 200120, China
Tel: (86) 21-5037-2222/Fax: (86) 21-5037-2200

Authorized Distributor:

© OMRON Corporation 2017-2021 All Rights Reserved.
In the interest of product improvement,
specifications are subject to change without notice.

CSM_1_6
Cat. No. H223-E1-04 0321 (0317)