DEHN + SÖHNE

Equipotential Bonding Busbar MS

For equipotential bonding
Connections for:
7 Rd conductors 2.5 16 mm^2
1 Rd conductor 7 10 mm
1 Fl conductor 30x3.5 mm or Rd conductor 8 10 mm

Technical data to part no.: 563 050

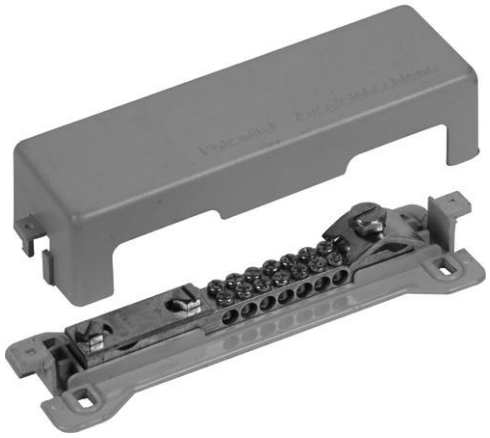

Connections (solid or stranded)	7 x 2.5-16 mm^2
Connection	1 x 7-10 mm^2
Connection Fl / (Rd)	1 x -30x3.5 or (8-10) mm
Contact bar	Ms
Cross section	50 mm^2
Cover	P (grey)

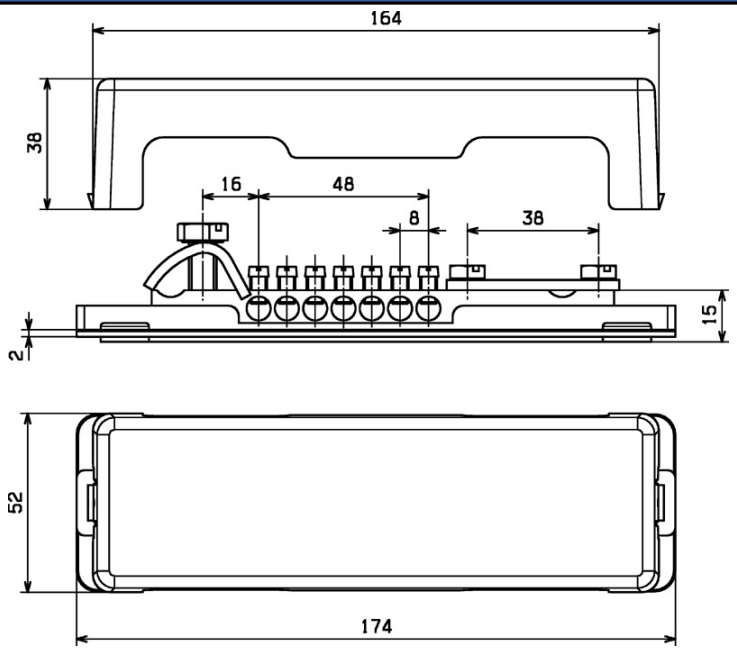

Ordering information

Type	Part No.	Packing unit
Equipotential Bonding Busbar MS	563 050	1 pce

We reserve the right to modify design, technology, dimensions, weights and materials according to technical progress. Illustrations are non-binding. Pictures may differ from the modules described.